VME Fiber Translator Board

Jefferson Lab Physics Fast Electronics Group
James Proffitt, October 1998

Description

The VME Fiber Translator board is a 6U VME module that translates digital data from optical fiber to NIM/TTL and ECL logic levels. The translator only derives power from the VME backplane and does not perform any VME bus functions. There are four separate 5MBd fiber input channels, each driving differential ECL (dECL) and NIM/TTL outputs. The dECL outputs are always available. Each NIM/TTL output is jumper selectable as NIM or TTL. Each NIM output can drive one 50-ohm NIM load and each TTL output can drive 50 ohms with reduced noise margin.

Typical Channel

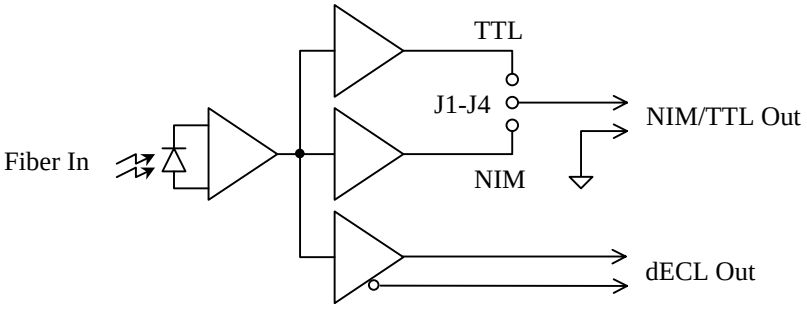

Specifications

Fiber Inputs	4 ST-terminated 5MBd digital optical fiber receivers (HP HFBR-2412T) Wavelength = 820nm Max. optical input power = 120µW (-9.2dBm) Switching threshold = 0.1µW (-40dBm)
dECL Outputs	4 channels on 8-pin DIN connector Io = ±50mA Vo = differential ECL
NIM Outputs	4 channels on coaxial Lemo connectors Io = +18mA (sink) Vo = NIM (open collector to –0.8VDC with 50-ohm load)
TTL Outputs	4 channels on coaxial Lemo connectors Io = ±48mA Vo = TTL; 2.9V with 50-ohm load
Max. Frequency	5MHz
Propagation Delay	< 90nS at 5MHz
+5VDC Supply Requirements	100mA under no load 330mA under full TTL load (4 TTL outputs into 50 ohms)
-12VDC Supply Requirements	370mA
Physical Properties	6U VME Eurocard; only P1 is utilized 4 65/125µm ST connectors for fiber input 1 2-row, 8-pin male header connector for dECL output 4 coaxial Lemo connectors for NIM/TTL output LED's (green) indicate the presence of +5VDC and -5.2VDC Jumpers J1 – J4 select NIM or TTL output for channels 1 through 4 respectively

REV.	REMARKS	DRAWN	DATE	APPVD

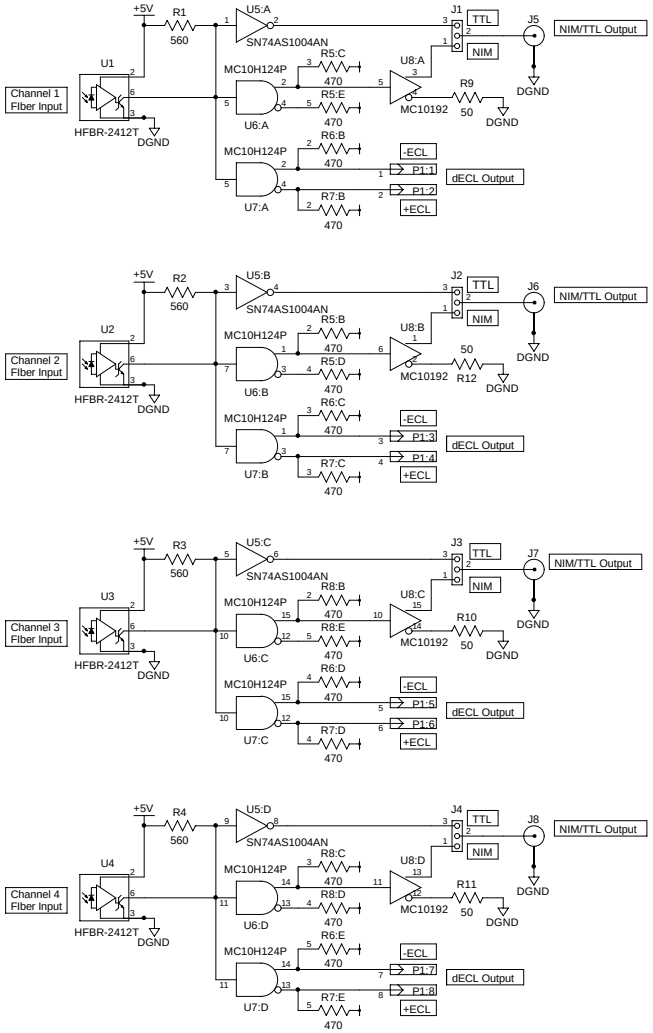

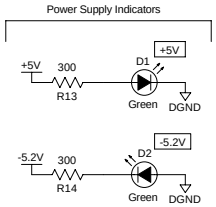

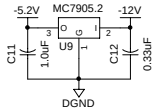

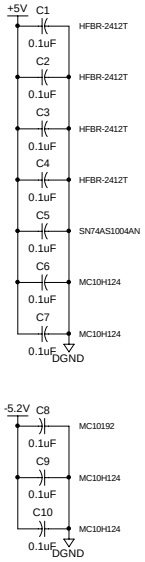

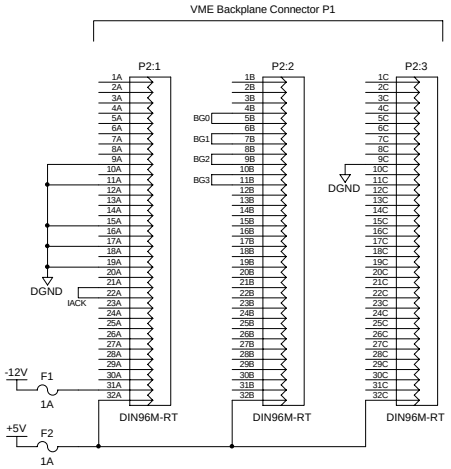

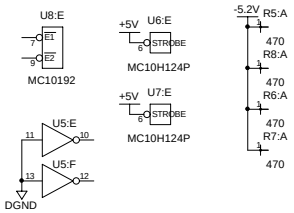

NOTES:
1. ALL RESISTORS IN OHMS, 1/4W, 1% UNLESS OTHERWISE SPECIFIED.
2. ALL CAPACITORS IN MICROFARADS UNLESS OTHERWISE SPECIFIED.

DRAWN J. Proffitt	DATE 9/10/98	Jefferson Lab — Thomas Jefferson National Accelerator Facility, NEWPORT NEWS, VIRGINIA, UNITED STATES DEPARTMENT OF ENERGY
CHECKED	DATE	
APPR/ORIGINATOR	DATE	TITLE Fast Electronics Group VME Fiber Translator Board Electrical Schematic
APPROVED		
ENGINEER J. Proffitt	SIZE C	DRAWING NO. / REV. -
USED ON	CAD I. D. fiber_translator.sch 9/10/98	SHEET 1 OF 1

REV.	REMARKS	DRAWN	DATE	APPROVED

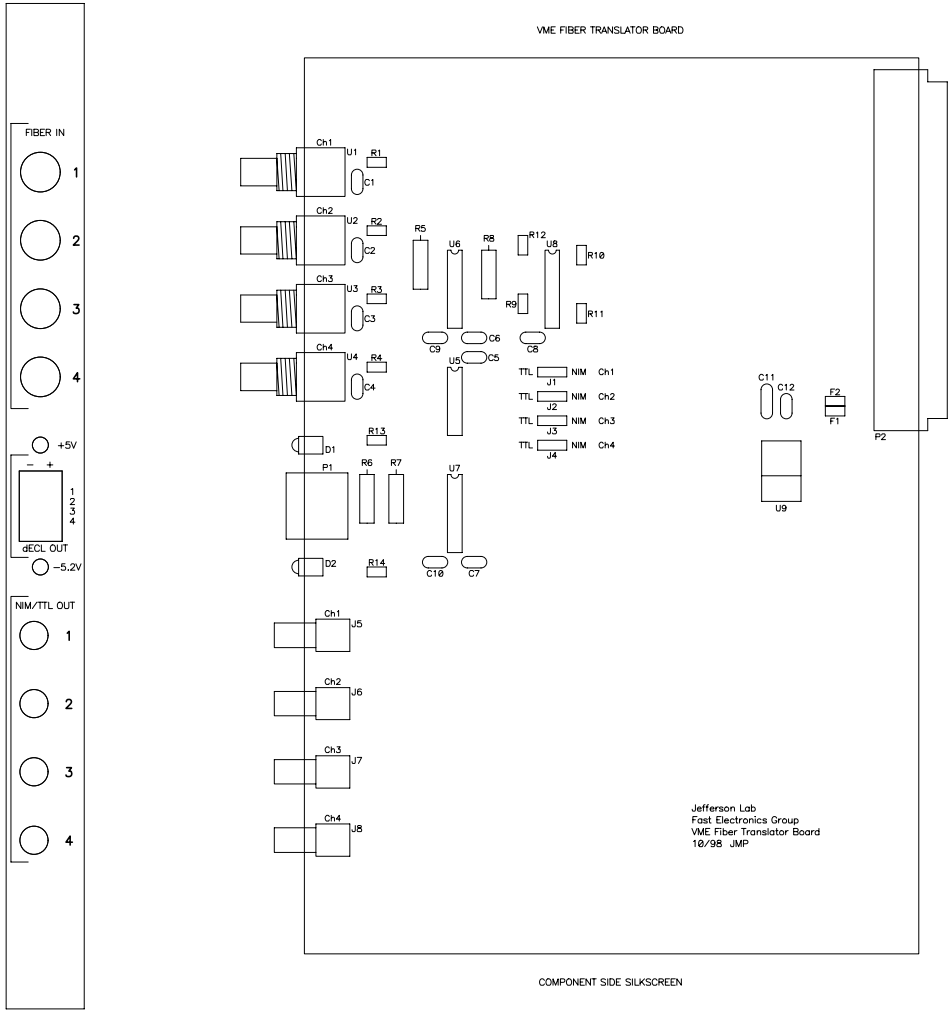

DRAWN J. Proffitt	DATE 9/30/98	Jefferson Lab — Thomas Jefferson National Accelerator Facility, NEWPORT NEWS, VIRGINIA, UNITED STATES DEPARTMENT OF ENERGY
CHECKED	DATE	
APPR/ORIGINATOR	DATE	TITLE: Fast Electronics Group VME Fiber Translator Board
APPROVED		
ENGINEER J. Proffitt		SIZE C; DRAWING NO.; REV. –
SCALE: 1X	SHOWN ON:	CAD ID NO. jlab-ft1.pcb; 9/30/98; SHEET OF

VME Fiber Translator Board

Parts List

Item	Type	Description	Mfr. Part Number	Stock#	Reference Designator	Qty
1	Capacitor	Ceramic, 0.1uF, 100VDC	Mu Rata Erie: RPE121X7R104M100V	5910-20020	C1, C2, C3, C4, C5, C6, C7, C8, C9, C10	10
2	Capacitor	Ceramic, 1.0uF, 50VDC	Mu Rata Erie: RPE113X7R105K50V	5910-20027	C11	1
3	Capacitor	Tantalum, 0.33uF, 35VDC	Sprague: 199D334X9035	5910-30640	C12	1
4	IC	TTL hex inverter	National Instruments: SN74AS1004AN		U5	1
5	IC	TTL-to-ECL translator	Motorola: MC10H124P		U6, U7	2
6	IC	ECL line driver	Motorola: MC10192		U8	1
7	IC	Voltage regulator, -5.2VDC	Motorola: MC7905.2		U9	1
8	IC	5MBd TTL optical fiber receiver	Hewlett-Packard: HFBR-2412T		U1, U2, U3, U4	4
9	LED	Green, right-angle, pcb mount	IDI: 5650F5	5963-01000	D1, D2	2
10	Fuse	Fuse, 1A, 125V, axial, pcb mount	Littelfuse: 251001	5920-30001	F1, F2	2
11	Resistor	5%, 1/8W, 50-ohm			R9, R10, R11, R12	4
12	Resistor	5%, 1/8W, 300-ohm			R13, R14	2
13	Resistor	5%, 1/8W, 560-ohm			R1, R2, R3, R4	4
14	Resistor	5%, 470-ohm, 5-pin bussed SIP	Bourns: 4605-M-101-471		R5, R6, R7, R8	4
15	Connector	3-pin vertical male pcb header, 0.1" pitch			J1, J2, J3, J4	4
16	Connector	2-pin female jumper, 0.1" pitch		5975-92010	J1, J2, J3, J4	4
17	Connector	Right-angle pcb mount coaxial Lemo receptacle	Fischer-America: DLP101A004	5935-73120	J5, J6, J7, J8	4
18	Connector	Right-angle pcb mount 96-pin male DIN	Erni: 533402	5935-20085	P2	1
19	Connector	Right-angle pcb mount 8-pin male header	AMP: 103167-1		P1	1
20	Hardware	Mounting hardware for HFBR-2412T	Hewlett-Packard: HFBR-4411			4
21	Hardware	Mounting hardware for voltage regulator	Keystone: 4724	5970-50000		1
22	Hardware	Heat sink for TO-220 voltage regulator	Thermalloy: 6078B	5970-50040		1
23	Hardware	VME front panel, prepunched, engraved	Elma: 26N604-41			1
24	Hardware	VME front panel hardware kit	Elma: 63-353			1
25	Hardware	VME front panel captive screw / insert				2
26	Hardware	Mounting hardware for 96-pin DIN connector (#2 screw, washer, nut)				2