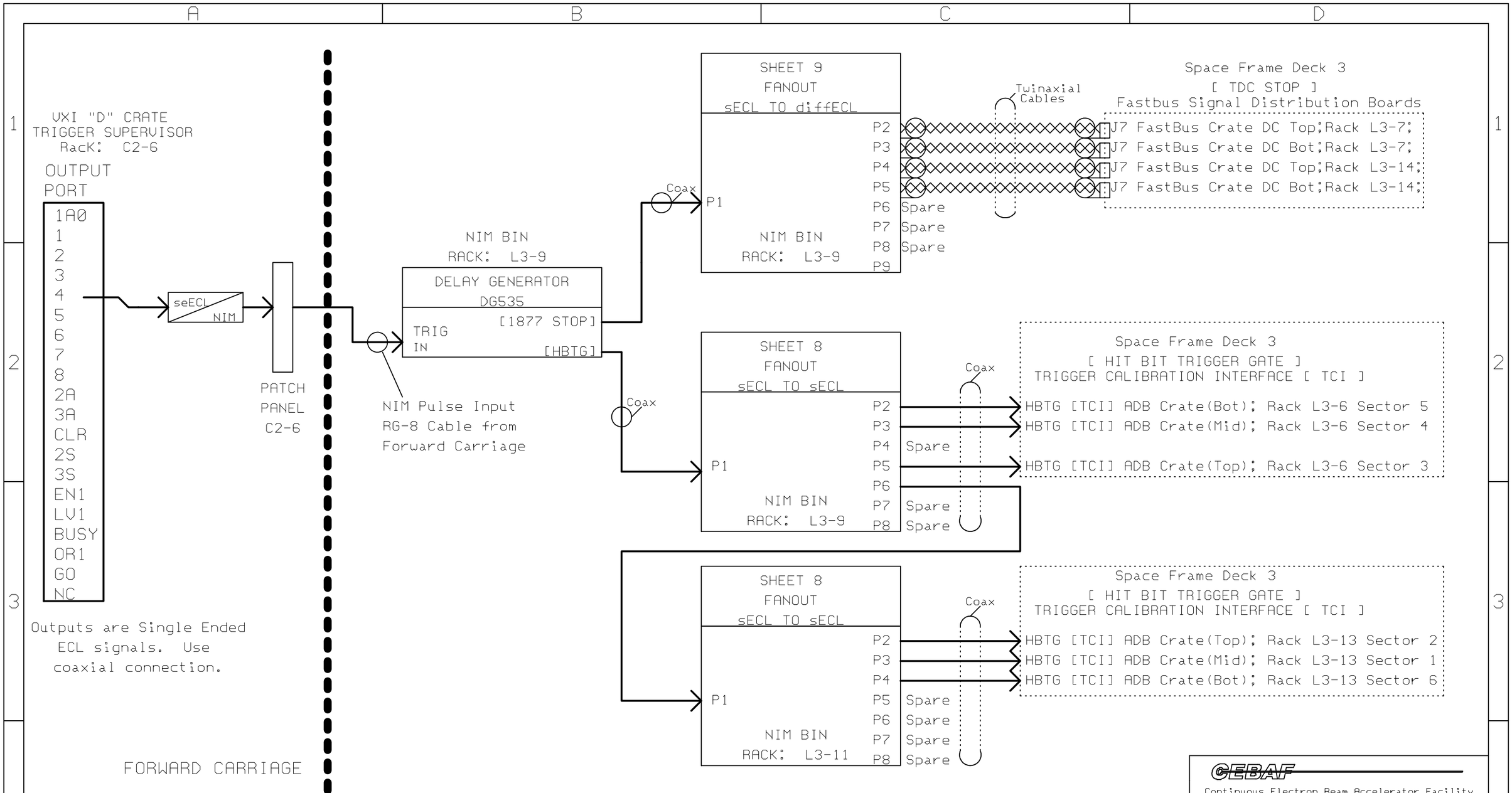

Trigger Signal Distribution
to
Space Frame Deck3 [Drift Chamber Region II]

CEBAF
Continuous Electron Beam Accelerator Facility
United States Department of Energy
Newport News, Virginia

Fast Electronics Group

Title Hall B Trigger Fanout Block Diagram

Engr. Cuevas
Dfts.
Appr.
Date 31 OCTOBER 1996

Size B | Number | Rev

Filename SHEET F | Sheet of