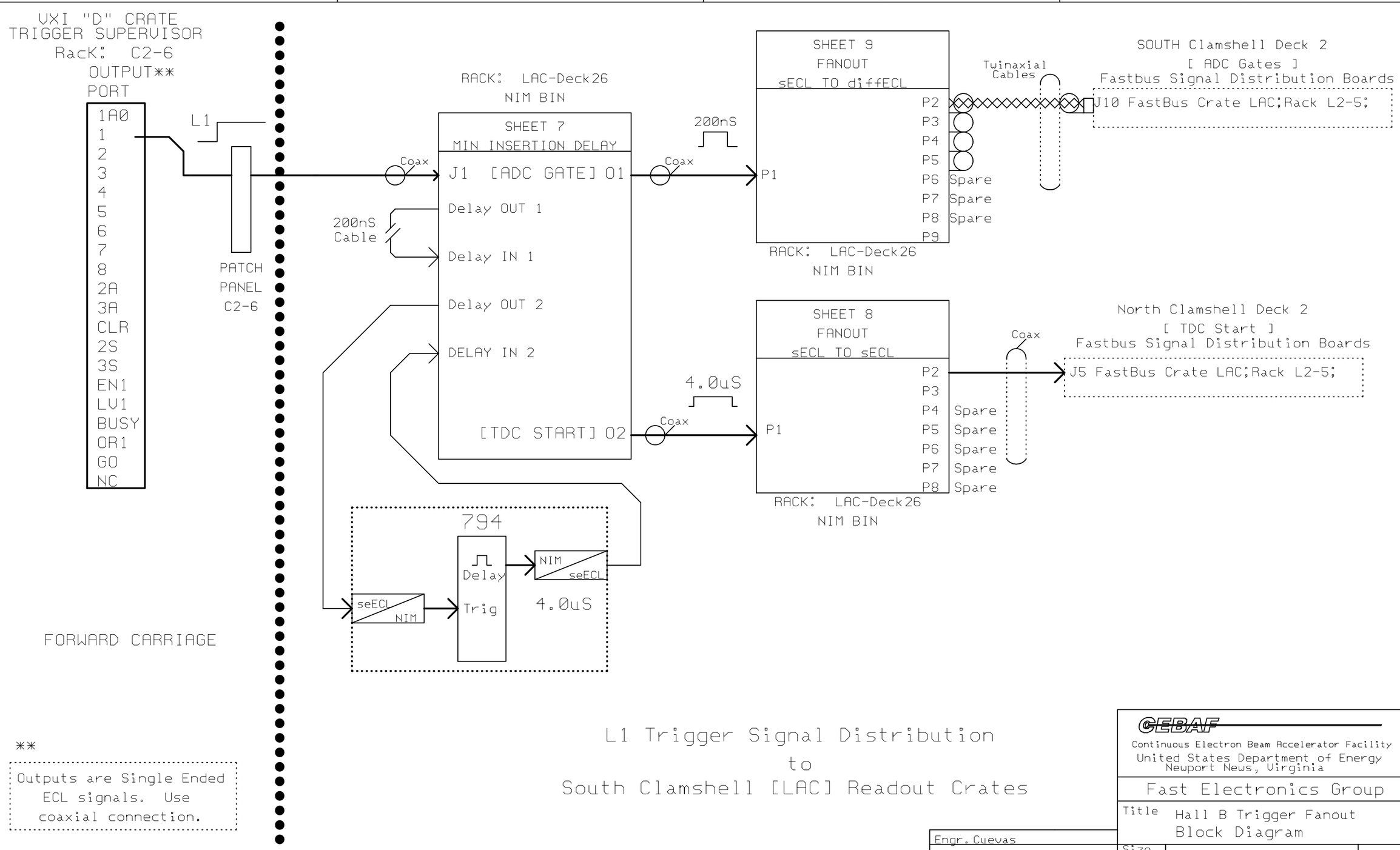


L1 Trigger Signal Distribution
to
South Clamshell [LAC] Readout Crates

CEBAF
Continuous Electron Beam Accelerator Facility
United States Department of Energy
Newport News, Virginia

Fast Electronics Group

Title Hall B Trigger Fanout Block Diagram

Engr. Cuevas
Dfts.
Appr.
Date 31 OCTOBER 1996

Size B | Number | Rev

Filename SHEET B | Sheet of