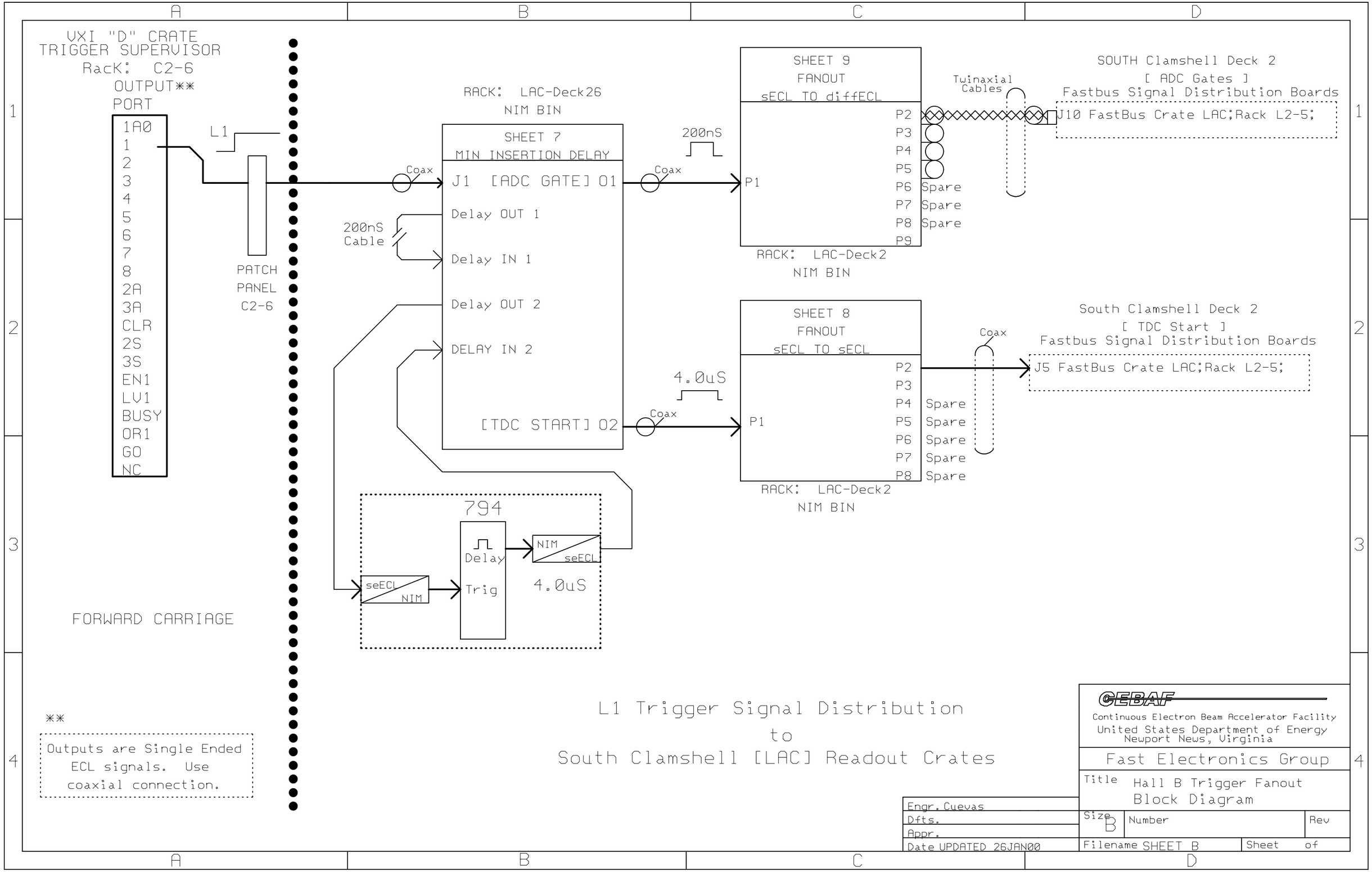
VXI "D" CRATE
TRIGGER SUPERVISOR
RacK: C2-6
OUTPUT**
PORT
1A0
1
2
3
4
5
6
7
8
2A
3A
CLR
2S
3S
EN1
LV1
BUSY
OR1
GO
NC
L1
PATCH
PANEL
C2-6
FORWARD CARRIAGE
RACK: LAC-Deck26
NIM BIN
SHEET 7
MIN INSERTION DELAY
Coax
J1 [ADC GATE] O1
Delay OUT 1
200nS
Cable
Delay IN 1
Delay OUT 2
DELAY IN 2
[TDC START] O2
200nS
Coax
4.0uS
Coax
794
seECL
NIM
Delay
Trig
NIM
seECL
4.0uS
SHEET 9
FANOUT
sECL TO diffECL
P1
P2
P3
P4
P5
P6 Spare
P7 Spare
P8 Spare
P9
RACK: LAC-Deck2
NIM BIN
Twinaxial
Cables
SOUTH Clamshell Deck 2
[ADC Gates]
Fastbus Signal Distribution Boards
J10 FastBus Crate LAC;Rack L2-5;
SHEET 8
FANOUT
sECL TO sECL
P1
P2
P3
P4 Spare
P5 Spare
P6 Spare
P7 Spare
P8 Spare
RACK: LAC-Deck2
NIM BIN
Coax
South Clamshell Deck 2
[TDC Start]
Fastbus Signal Distribution Boards
J5 FastBus Crate LAC;Rack L2-5;
**
Outputs are Single Ended
ECL signals. Use
coaxial connection.
L1 Trigger Signal Distribution
to
South Clamshell [LAC] Readout Crates
CEBAF
Continuous Electron Beam Accelerator Facility
United States Department of Energy
Newport News, Virginia
Fast Electronics Group
Title Hall B Trigger Fanout
Block Diagram
Engr. Cuevas
Dfts.
Appr.
Date UPDATED 26JAN00
Size B
Number
Rev
Filename SHEET B
Sheet of