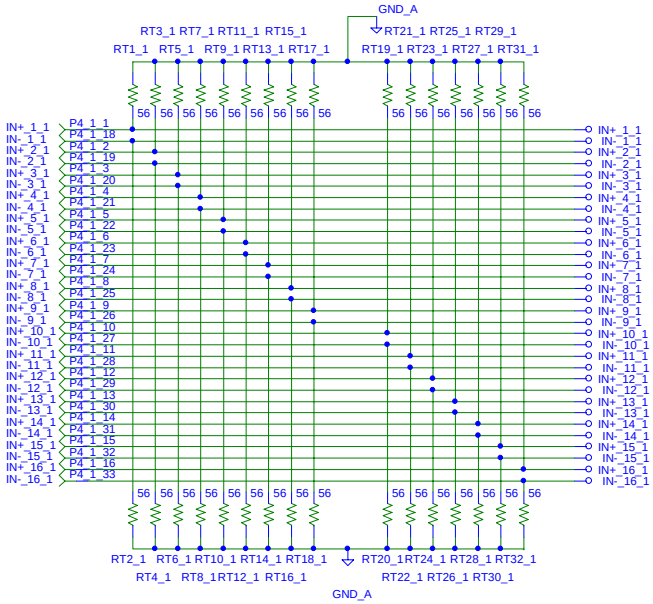

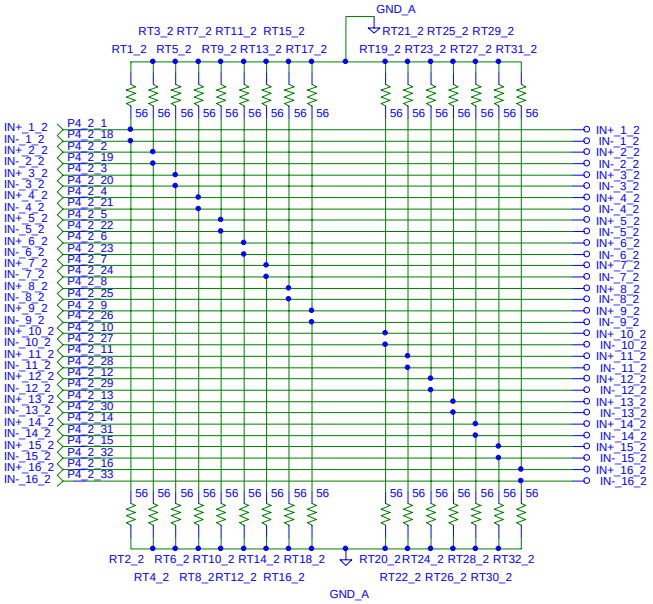

Jefferson Lab
12000 Jefferson Ave.
Newport News, VA 23606
Ph. 757-269-7433
Fax 757-269-5800
barbosa@jlab.org

ADB - 96 CHANNEL

AMPLIFIER/DISCRIMINATOR BOARD

Fernando J. Barbosa

Revision: - 11 December 1995 Page 1 of 8

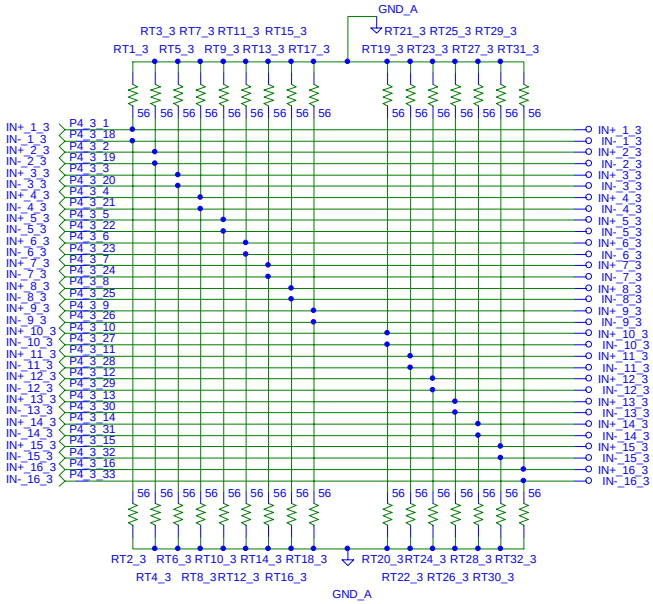

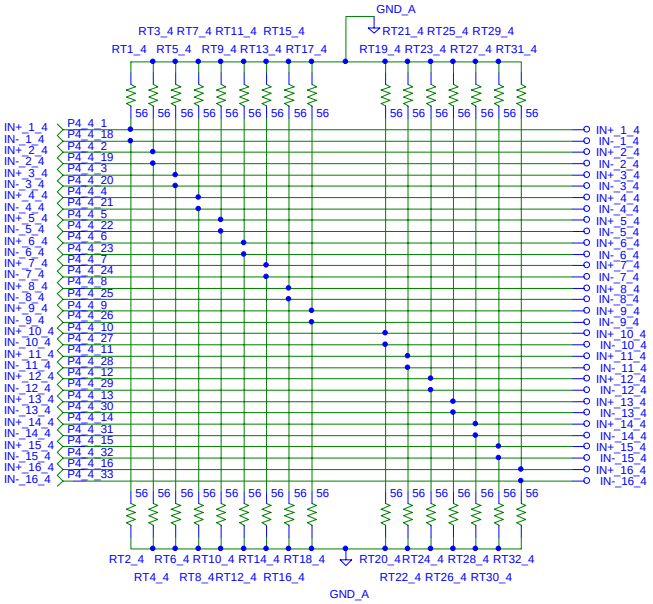

Jefferson Lab
12000 Jefferson Ave.
Newport News, VA 23606
Ph. 757-269-7433
Fax 757-269-5800
barbosa@jlab.org

ADB - 96 CHANNEL

AMPLIFIER/DISCRIMINATOR BOARD

Fernando J. Barbosa

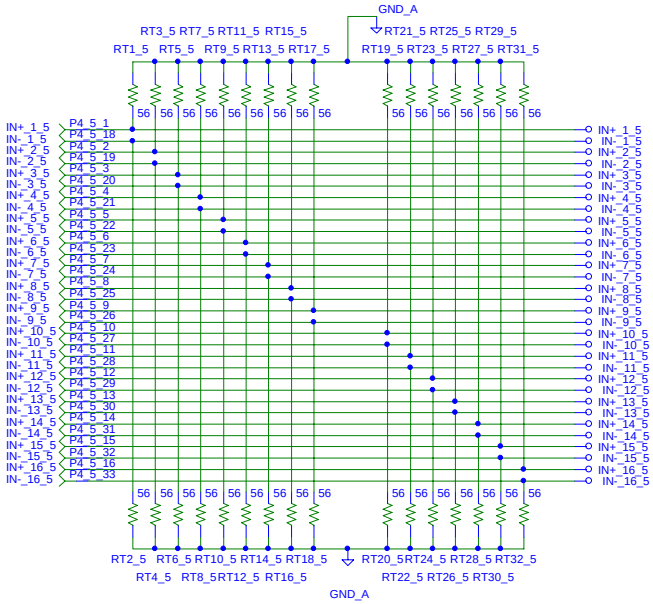

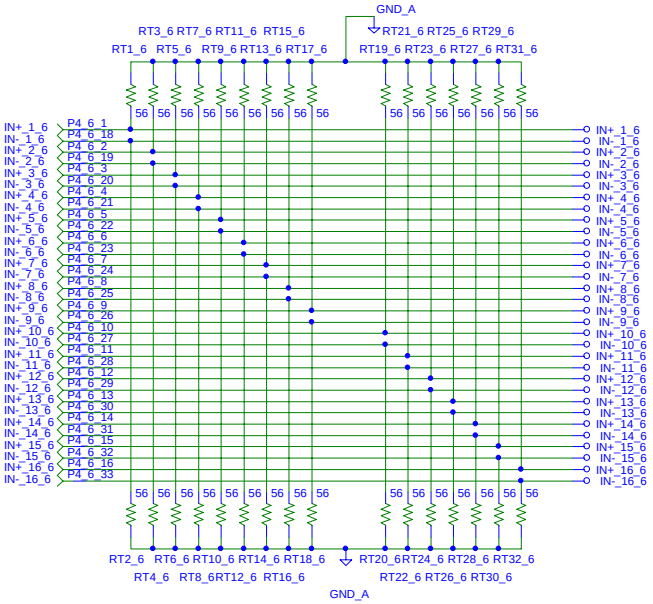

Jefferson Lab
12000 Jefferson Ave.
Newport News, VA 23606
Ph. 757-269-7433
Fax 757-269-5800
barbosa@jlab.org

ADB - 96 CHANNEL

AMPLIFIER/DISCRIMINATOR BOARD

Fernando J. Barbosa

Revision: - 11 December 1995 Page 3 of 8

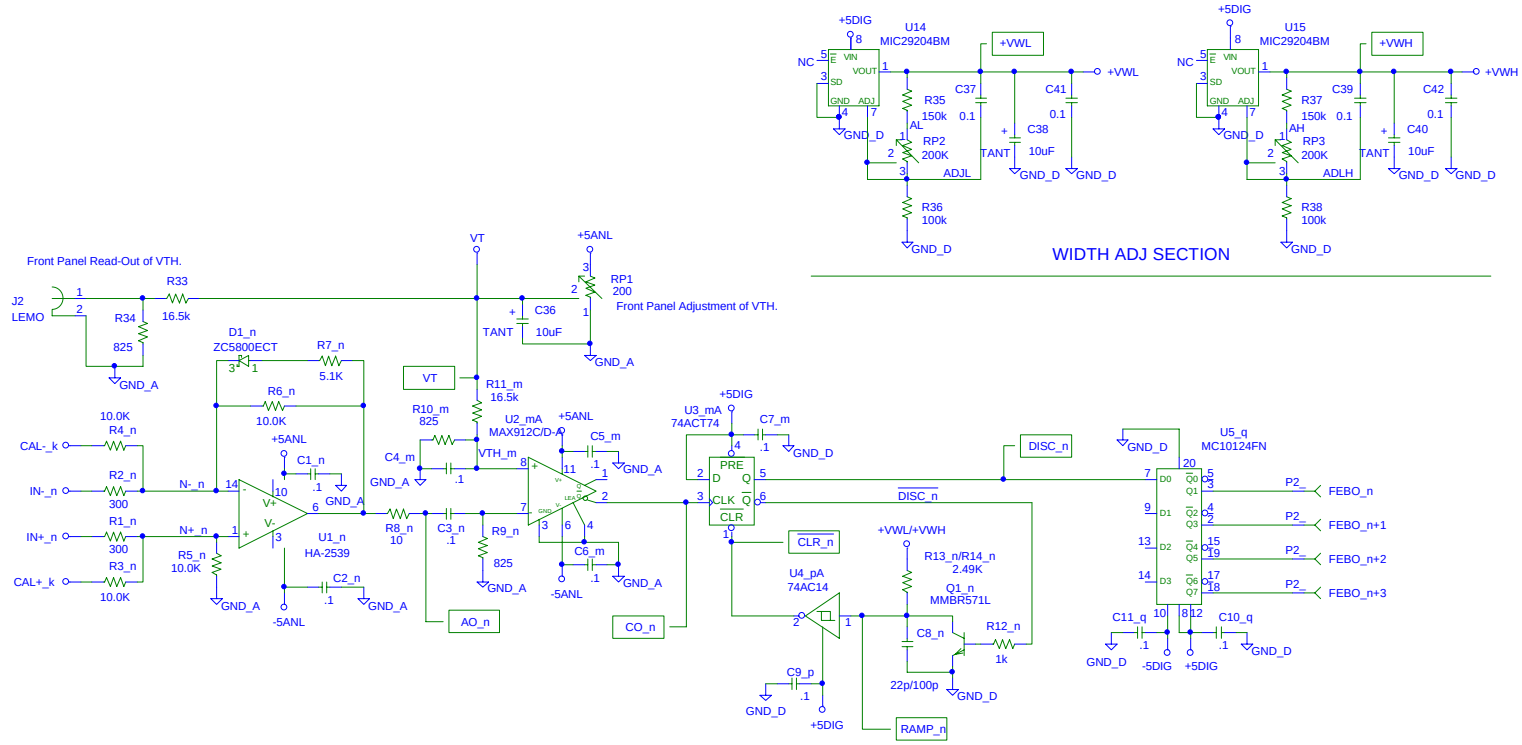

NOTES:

1. TYPICAL ONE CHANNEL SHOWN: VTH_m, U2 AND U3 ARE SHARED BY TWO ODD OR EVEN CONSECUTIVE CHANNELS
   U4 AND U5 ARE SHARED BY FOUR CONSECUTIVE CHANNELS.
2. n=1, 96
   m=1, 48
   q=1, 24
   p=1, 16
   r=1,
3. +VWL AND +VWH CONTROL OUTPUT PULSE WIDTHS OF CHANNELS 1-8 AND 9-16, RESPECTIVELY, FOR EACH GROUP OF 8 CHANNELS.

Jefferson Lab
12000 Jefferson Ave.
Newport News, VA 23606
Ph. 757-269-7433
Fax 757-269-5800
barbosa@jlab.org

ADB - 96 CHANNEL

AMPLIFIER/DISCRIMINATOR BOARD

Fernando J. Barbosa

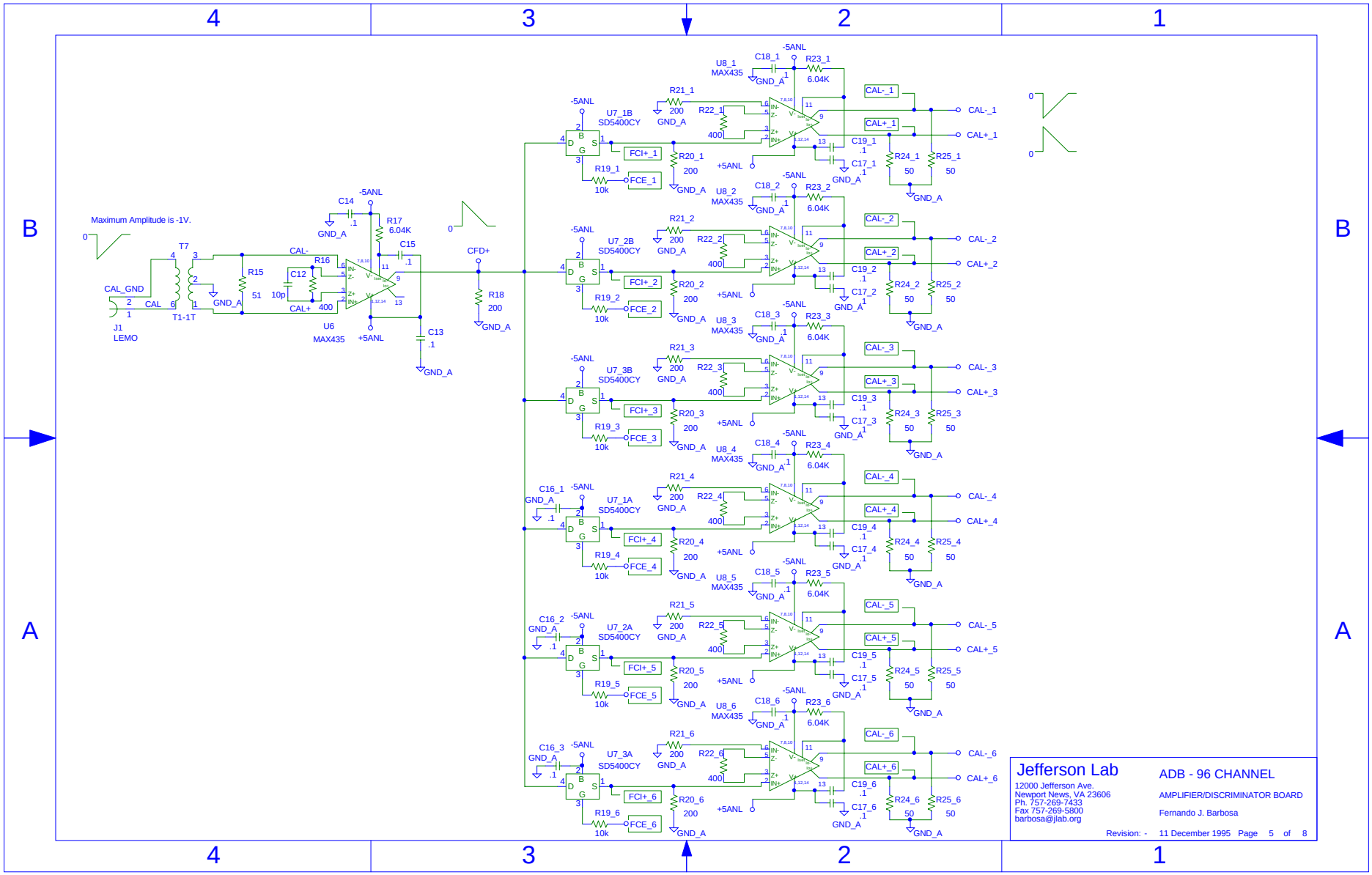
Maximum Amplitude is -1V.
J1
LEMO
CAL_GND
CAL
T7
T1-1T
R15
51
GND_A
C12
10p
R16
400
CAL-
CAL+
U6
MAX435
C14
.1
R17
6.04K
C15
.1
C13
.1
+5ANL
-5ANL
CFD+
R18
200
U7_1B
SD5400CY
U7_2B
SD5400CY
U7_3B
SD5400CY
U7_1A
SD5400CY
U7_2A
SD5400CY
U7_3A
SD5400CY
U8_1
MAX435
U8_2
MAX435
U8_3
MAX435
U8_4
MAX435
U8_5
MAX435
U8_6
MAX435
R21_1
R21_2
R21_3
R21_4
R21_5
R21_6
R22_1
R22_2
R22_3
R22_4
R22_5
R22_6
R20_1
R20_2
R20_3
R20_4
R20_5
R20_6
R19_1
R19_2
R19_3
R19_4
R19_5
R19_6
10k
FCI+_1
FCE_1
FCI+_2
FCE_2
FCI+_3
FCE_3
FCI+_4
FCE_4
FCI+_5
FCE_5
FCI+_6
FCE_6
C16_1
C16_2
C16_3
C18_1
C18_2
C18_3
C18_4
C18_5
C18_6
R23_1
R23_2
R23_3
R23_4
R23_5
R23_6
6.04K
C19_1
C19_2
C19_3
C19_4
C19_5
C19_6
C17_1
C17_2
C17_3
C17_4
C17_5
C17_6
R24_1
R24_2
R24_3
R24_4
R24_5
R24_6
R25_1
R25_2
R25_3
R25_4
R25_5
R25_6
50
CAL-_1
CAL+_1
CAL-_2
CAL+_2
CAL-_3
CAL+_3
CAL-_4
CAL+_4
CAL-_5
CAL+_5
CAL-_6
CAL+_6
Jefferson Lab
12000 Jefferson Ave.
Newport News, VA 23606
Ph. 757-269-7433
Fax 757-269-5800
barbosa@jlab.org
ADB - 96 CHANNEL
AMPLIFIER/DISCRIMINATOR BOARD
Fernando J. Barbosa
Revision: - 11 December 1995 Page 5 of 8

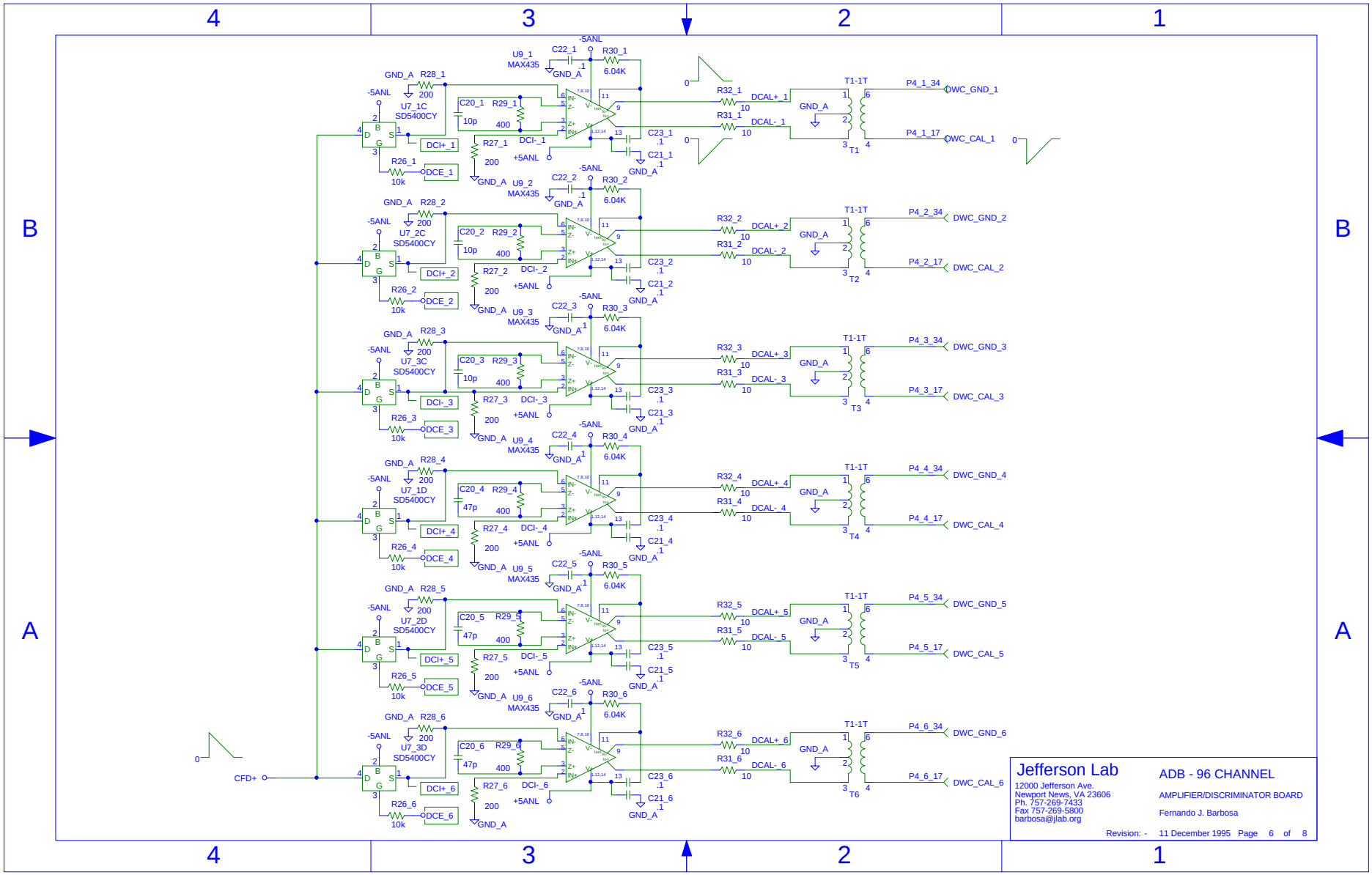
U9_1
MAX435
C22_1
R30_1
6.04K
-5ANL
GND_A
R28_1
200
U7_1C
SD5400CY
C20_1
10p
R29_1
400
R27_1
200
DCI+_1
DCI-_1
+5ANL
R26_1
10k
DCE_1
C23_1
.1
C21_1
R32_1
DCAL+_1
R31_1
DCAL-_1
T1-1T
T1
P4_1_34
DWC_GND_1
P4_1_17
DWC_CAL_1
U9_2
MAX435
C22_2
R30_2
R28_2
U7_2C
C20_2
R29_2
R27_2
DCI+_2
DCI-_2
R26_2
DCE_2
C23_2
C21_2
R32_2
DCAL+_2
R31_2
DCAL-_2
T2
P4_2_34
DWC_GND_2
P4_2_17
DWC_CAL_2
U9_3
MAX435
C22_3
R30_3
R28_3
U7_3C
C20_3
R29_3
R27_3
DCI+_3
DCI-_3
R26_3
DCE_3
C23_3
C21_3
R32_3
DCAL+_3
R31_3
DCAL-_3
T3
P4_3_34
DWC_GND_3
P4_3_17
DWC_CAL_3
U9_4
MAX435
C22_4
R30_4
R28_4
U7_1D
C20_4
47p
R29_4
R27_4
DCI+_4
DCI-_4
R26_4
DCE_4
C23_4
C21_4
R32_4
DCAL+_4
R31_4
DCAL-_4
T4
P4_4_34
DWC_GND_4
P4_4_17
DWC_CAL_4
U9_5
MAX435
C22_5
R30_5
R28_5
U7_2D
C20_5
R29_5
R27_5
DCI+_5
DCI-_5
R26_5
DCE_5
C23_5
C21_5
R32_5
DCAL+_5
R31_5
DCAL-_5
T5
P4_5_34
DWC_GND_5
P4_5_17
DWC_CAL_5
U9_6
MAX435
C22_6
R30_6
R28_6
U7_3D
C20_6
R29_6
R27_6
DCI+_6
DCI-_6
R26_6
DCE_6
C23_6
C21_6
R32_6
DCAL+_6
R31_6
DCAL-_6
T6
P4_6_34
DWC_GND_6
P4_6_17
DWC_CAL_6
CFD+
Jefferson Lab
12000 Jefferson Ave.
Newport News, VA 23606
Ph. 757-269-7433
Fax 757-269-5800
barbosa@jlab.org
ADB - 96 CHANNEL
AMPLIFIER/DISCRIMINATOR BOARD
Fernando J. Barbosa
Revision: -
11 December 1995
Page 6 of 8

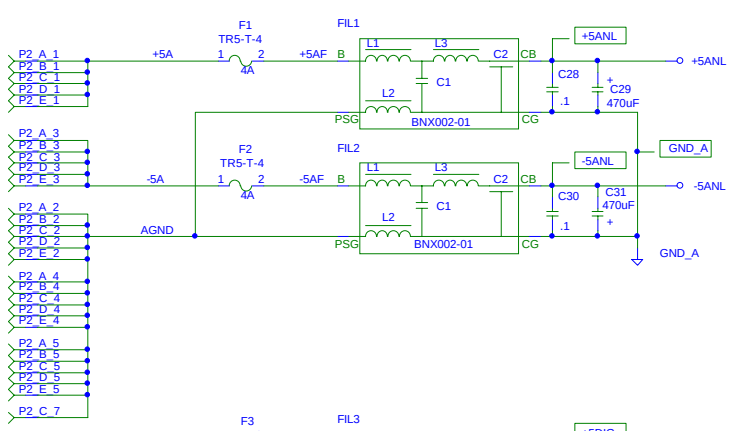

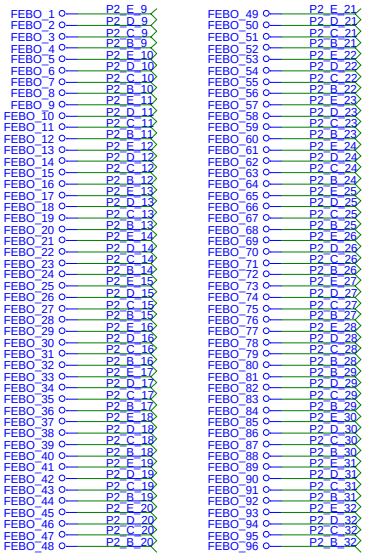

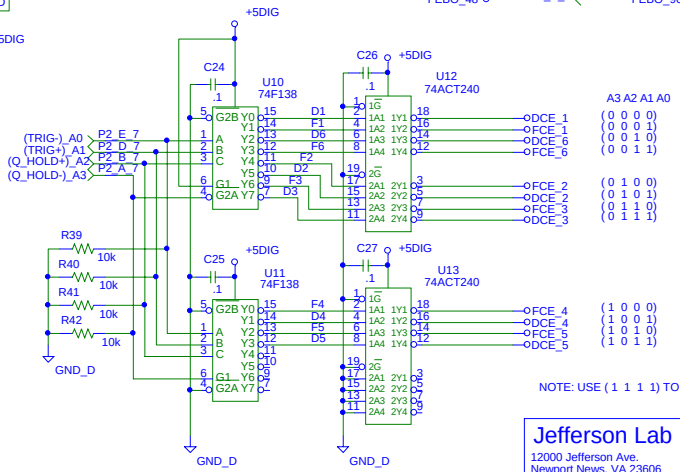

NOTE: USE (1 1 1 1) TO TURN CALIBRATION OFF.

WARNING: For safety, use only UL recognized time-lag fuses of proper rating!

Jefferson Lab
12000 Jefferson Ave.
Newport News, VA 23606
Ph. 757-269-7433
Fax 757-269-5800
barbosa@jlab.org

ADB - 96 CHANNEL

AMPLIFIER/DISCRIMINATOR BOARD

Fernando J. Barbosa

Revision: - 11 December 1995 Page 7 of 8