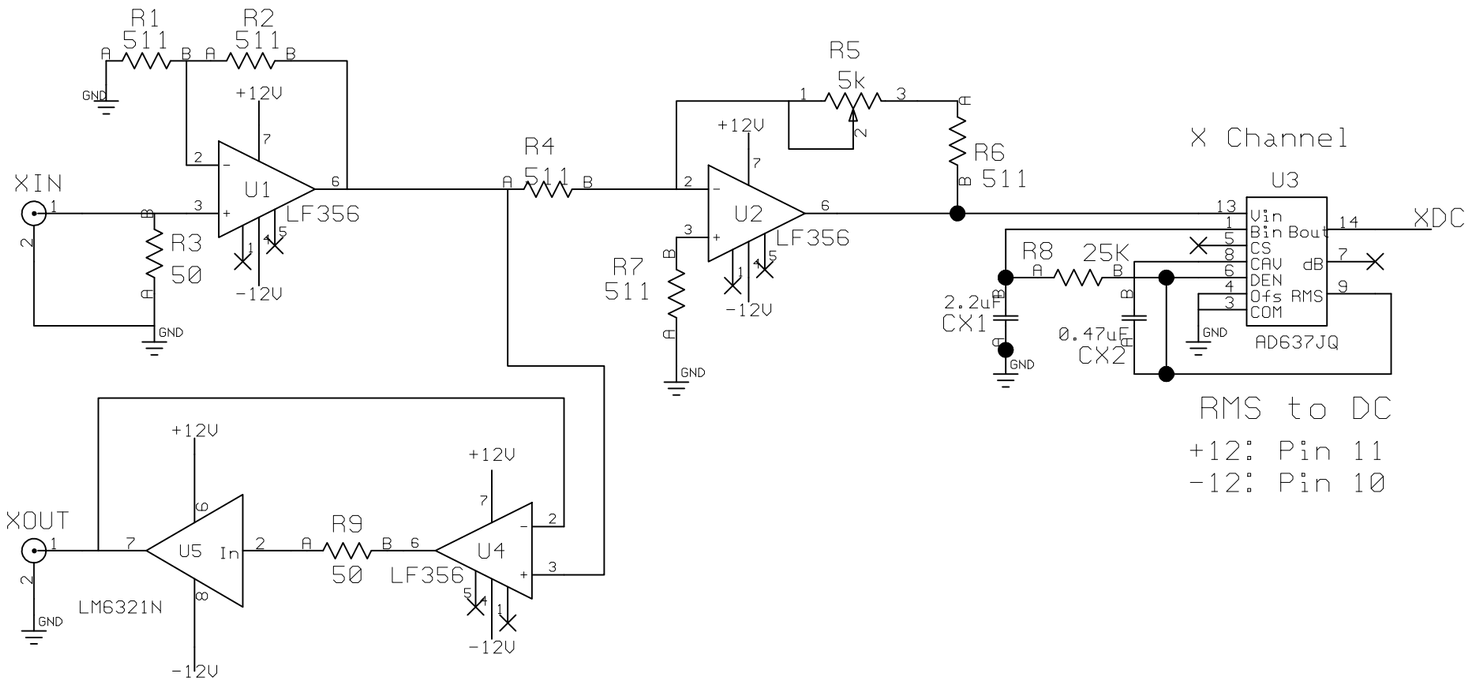

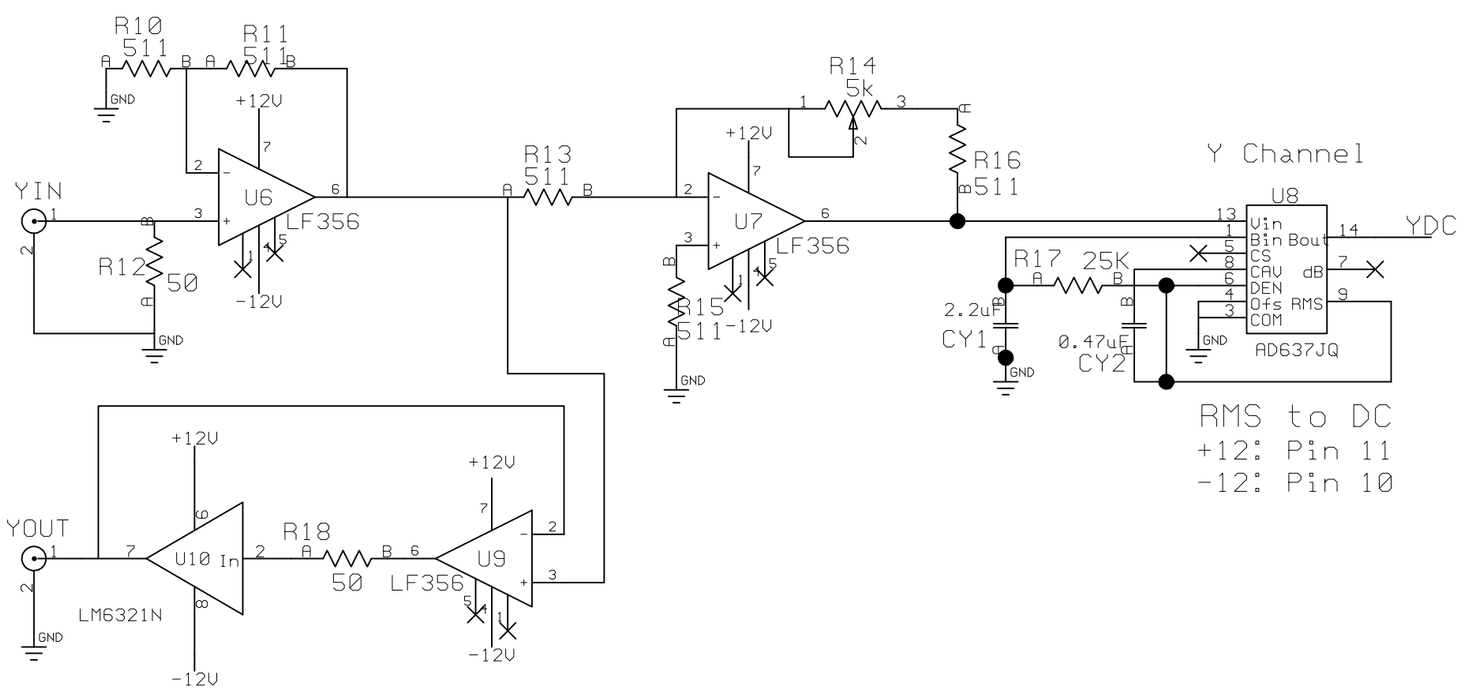

ANALOG INPUT STAGE
RMS-DC CONVERTERS

CEBAF
Continuous Electron Beam Accelerator Facility
United States Department of Energy
Newport News, Virginia

Fast Electronics Group

Title
Raster Monitor Module

Engr. CUEVAS	Size B	Number	Rev
Dfts.			
Appr.			
Date 16DEC97	Filename	Sheet1 of 6	