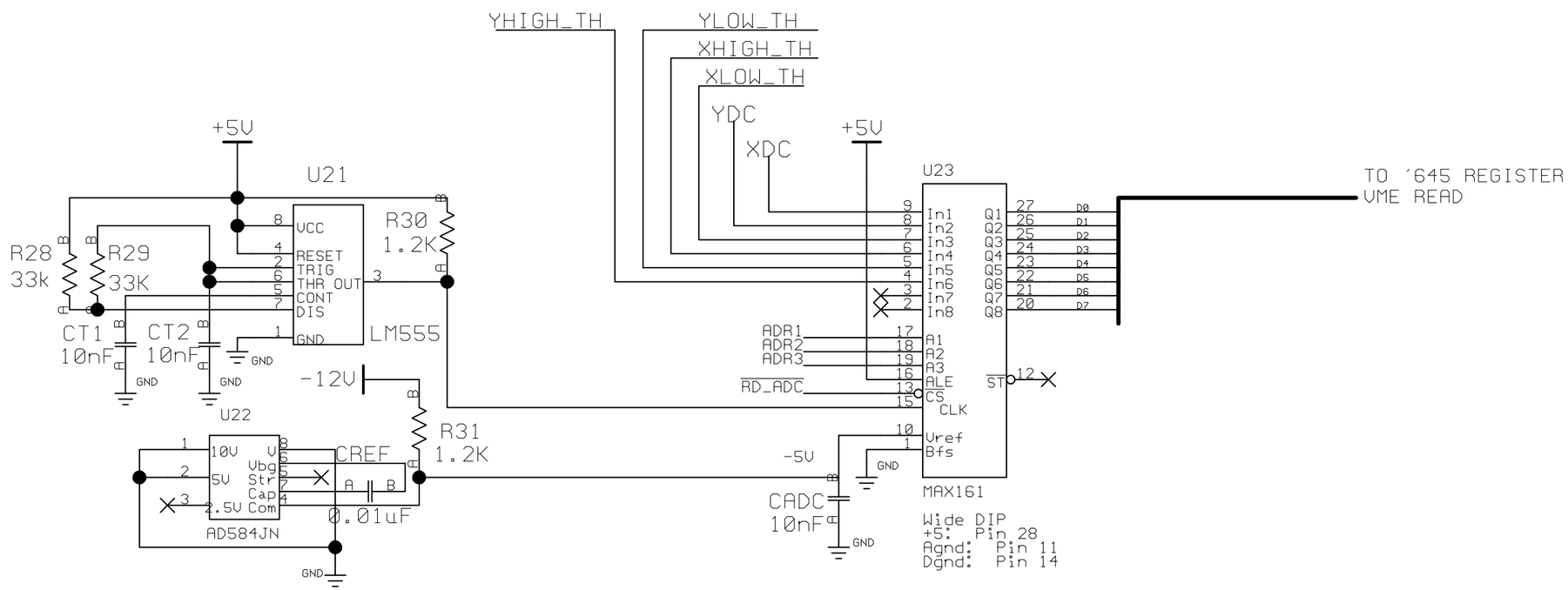

EIGHT CHANNEL ADC
CONTINUOUS SCAN

CEBAF
Continuous Electron Beam Accelerator Facility
United States Department of Energy
Newport News, Virginia

Fast Electronics Group

Title
Raster Monitor Module

Size B	Number	Rev
Filename	Sheet3 of 6	

Engr.
Dfts.
Appr.
Date 17DEC97