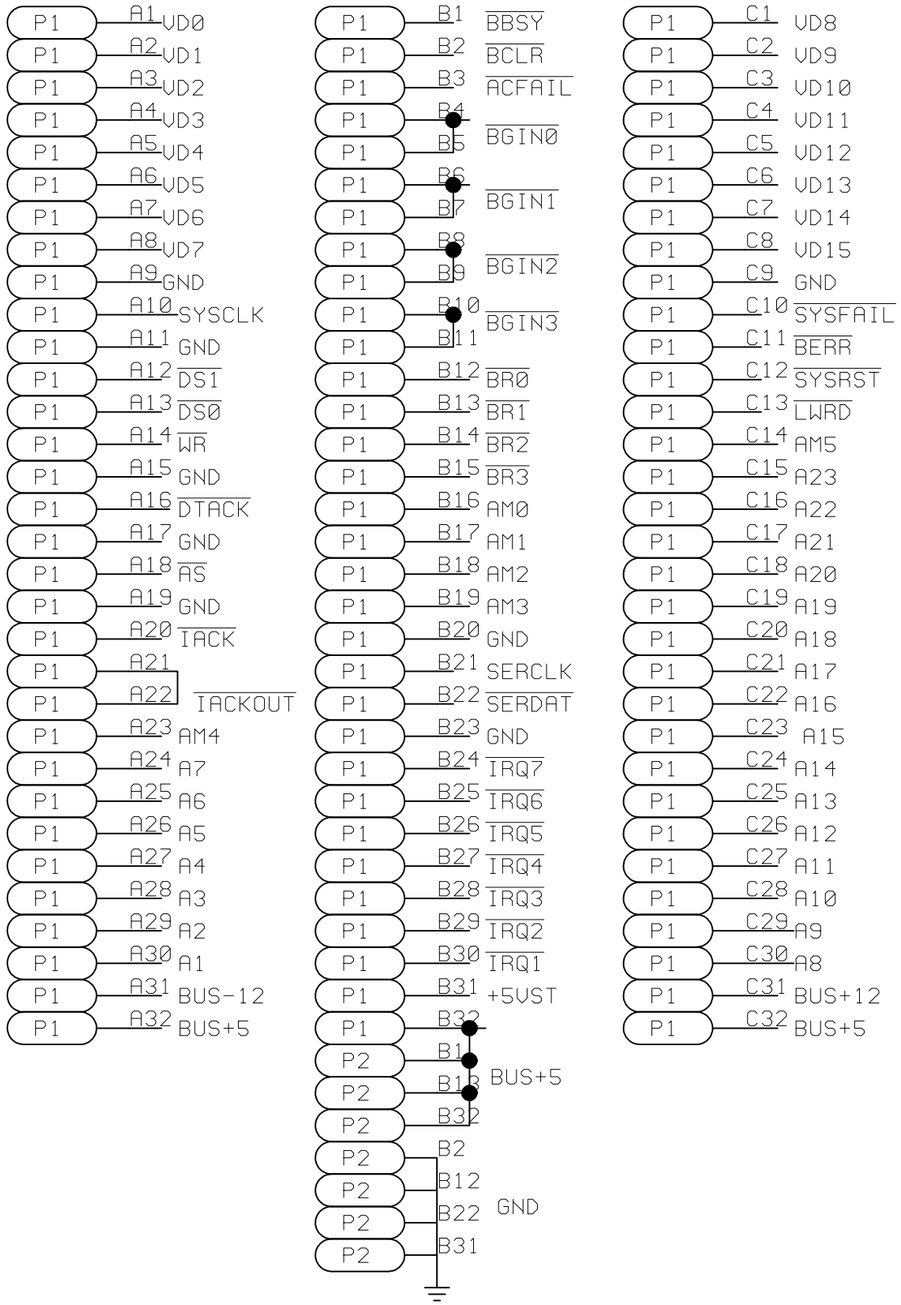

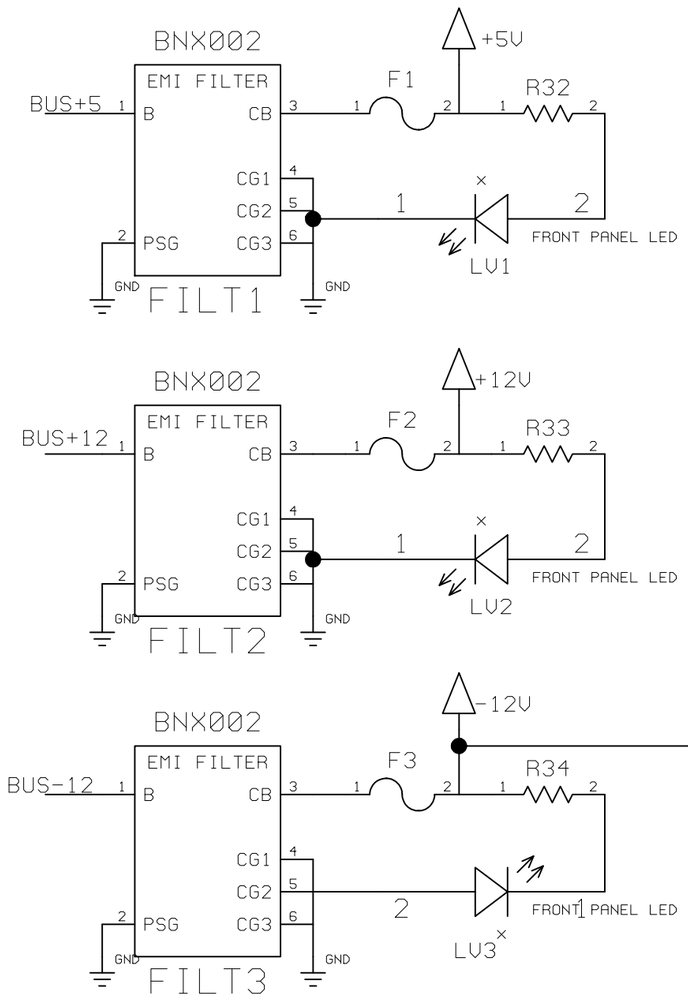

FUSES AND FILTERS

Engr.	
Dfts.	
Appr.	
Date	18DEC98

CEBAF
Continuous Electron Beam Accelerator Facility
United States Department of Energy
Newport News, Virginia

Fast Electronics Group

Title: Raster Monitor Module

Size	Number	Rev
B		

Filename BRM2_4 | Sheet4 of 6