805 MHz Vacuum Cavity Achieved Gradient Results

Alfred Moretti
Fermilab APC
NuFact 2012
Williamsburg, VA
July 23-28, 2012

Outline of this Talk

1. Brief outline drawings of the Vacuum tested cavities: 6 Cell Open cell, PillBox, Pillbox with Buttons, All Seasons and Box cavity.
2. Description of the RF breakdown testing of the cavities
3. Observed Spark damage in the LBL Pillbox Cavity with Flat Cu, Curve Be Windows and Single button testing.
4. Electric Gradient Field Patterns for the 3 Test PillBox Cavity Arrangements
5. Outline drawings of the 3 types of Pillbox cavity tested
6. Observed Sparking Damage on the Cu Iris in the 2 Button cavity after Testing with Flat Cu Windows and Button
7. Summary of all Cu tested cavities and maximum Gradients reached in 3 T magnetic field.
8. Individual Cavity Stand along Results

History of the Cavity Testing

- The LBL Pillbox cavity was originally designed with removable 16 cm OD windows to test different materials especially Be because of its very low Muon cross-section and expected high gradient potential.

- The first testing, proof of principle experiments, was performed with flat Cu windows. This demonstrated a large reduction in achievable gradient at large magnetic fields.

- The next testing was on flat Be widows and lastly on curved Be windows. The same Gradient results were achieved in all cases.

- Because the sparking damage observed in the cavity was mainly in the Cu Cavity iris and coupler aperture, it was then decided to modify the cavity for single button testing to reduce the stress on the iris and coupler aperture and be able to test buttons of different materials.

- Because the spark damage observed in the single button testing continued to occur in Cu body of the cavity and simulation showed that the stress on the coupler aperture was still high, it was decided to modify the cavity for 2 button testing. This would concentrate the peak gradient on the button tip away for the body of the cavity and greatly reduce the stress on the coupler aperture. This cavity was first tested with flat copper windows.

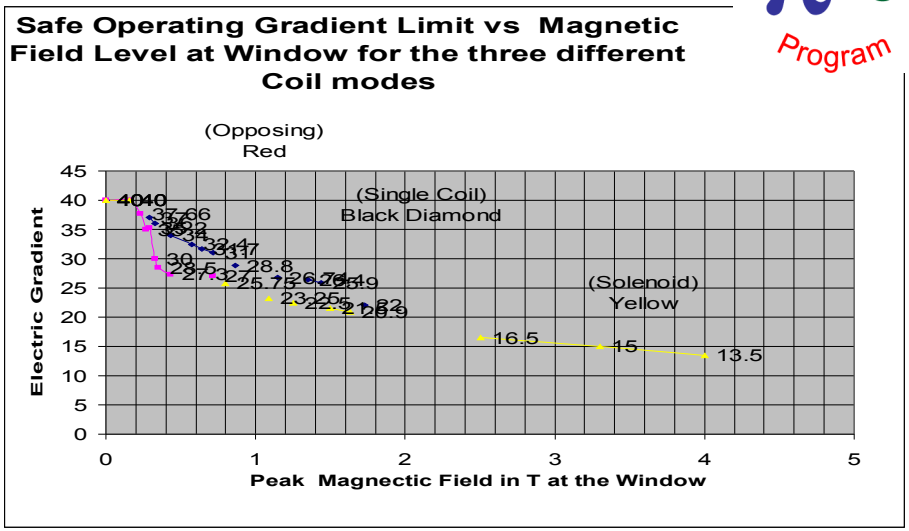

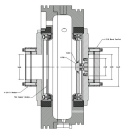

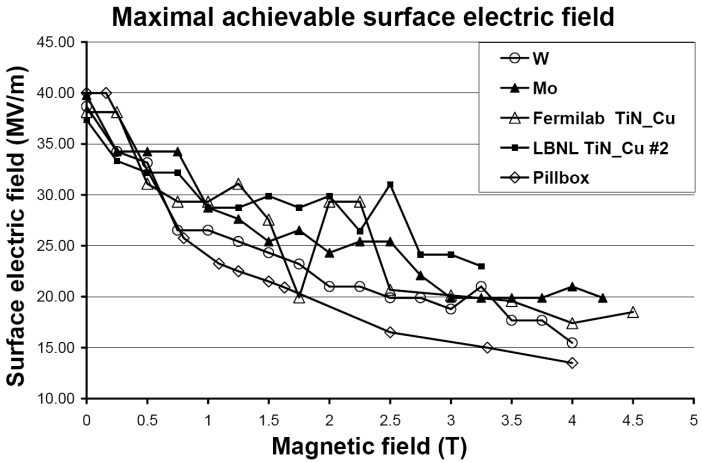

Parallel E and B Gradient breakdown limit in single button test.

Vacuum Cavities Tested in Lab G and the MTA

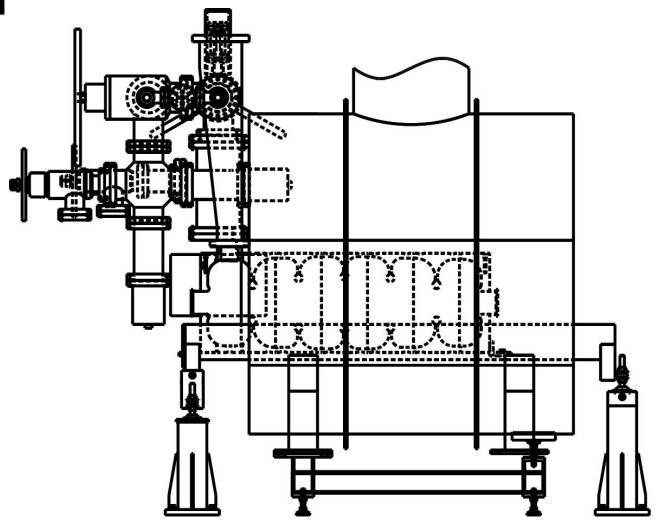

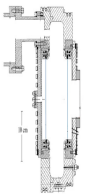

Fermilab 6 Cell Open cell cavity

LBL Pillbox cavity
With flat windows

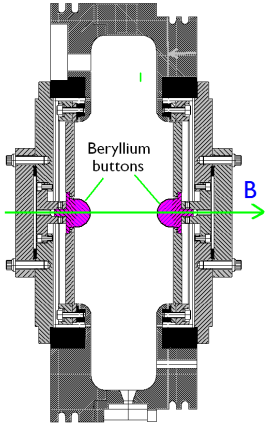

LBL Pillbox
cavity
With Buttons

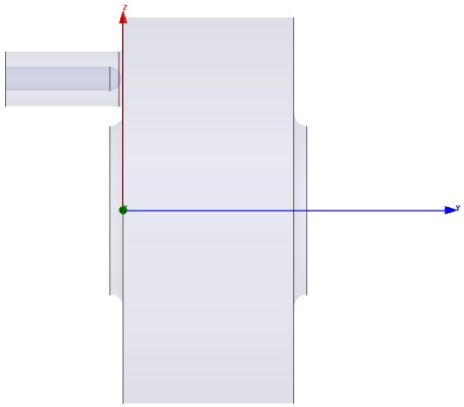

All Seasons cavity
built by Muons Inc.
for LANL

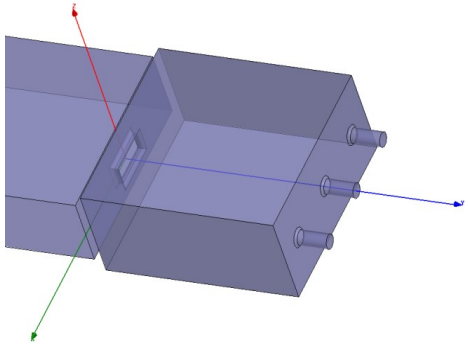

Fermilab
Orthogonal Box
Cavity

History of vacuum cavity Testing Continued

1.The first cavity tested at Fermilab was the 6 Cell Open Cell Cavity. Its shape was designed to match the beam profile in a cooling channel.

2. The All Season cavity was design and built by Muons Inc. for LANL. It was designed to be both a Vacuum Cavity and a high pressure H2 gas test cavity for continuous channel cooling. Thus far it has it has only been tested in vacuum.

3. Because we had not reached our goal of 25 MV/m in a 3 T solenoidal magnetic field, it was decided to build a Orthogonal Box cavity with the DC magnetic field orthogonal to the RF electric field to suppress breakdown. Although the gradients exceeded 35 MV/m, the results at small angle changes we not great enough to continue with this option. However, the vacuum breakdown limit was quite high 50 MV/m.

Observed Spark damage in the LBL Pillbox Cavity With Flat Cu, Curve Be Windows and Single button

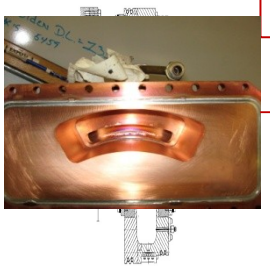

serious Spark aperture damage areas

Serious spark damage around 12 and 6 O 'clock Cu cavity iris

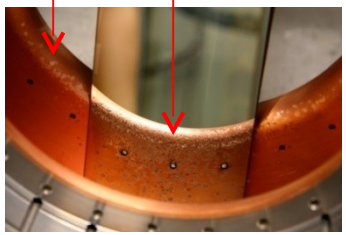

- The LBL Pillbox cavity after 250 E6 pulses with Flat, Curved and Button testing accumulated a great deal of spark damage as shown here.

- The serious spark damage observed in the coupling iris was due to the high gradients in the coupler aperture because of the its small radii. The Cu iris was damaged mainly between 11 to 1 O' clock at the top near coupler and 5 to 7 O' clock at the bottom; the damage was equal on both sides.

- Because of the spark damage shown and the small coupling iris radii, it was decided to refurbish the cavity at JLAB.

- The refurbishing was done at JLAB in their cleanroom and a special tool was designed to machine a 3.175 mm radius on the coupling iris.

Electric Field Patterns for the 3 PB Cavity Test Arrangements

Gradient pattern for LBL Pillbox cavity with flat windows (the first RF Pillbox test arrangement). The peak gradient is on the RF coupling aperture and not on axis and is 3 times greater than the on axis field. There is a smaller enhancement on the cavity iris.

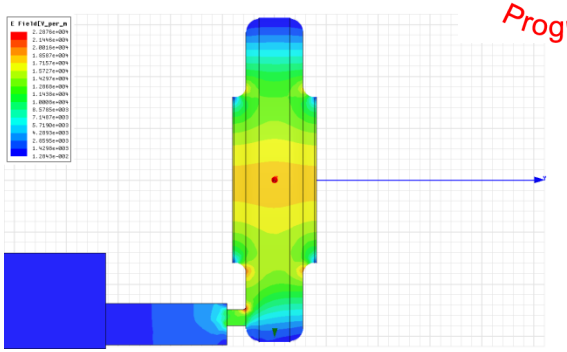

Gradient pattern for Pillbox cavity with a 3.81 cm dia button and curved Be Window testing arrangement (this was the first button testing arrangement). The gradient pattern has changed. The peak is on the button and has a smaller enhancement on the coupling iris.

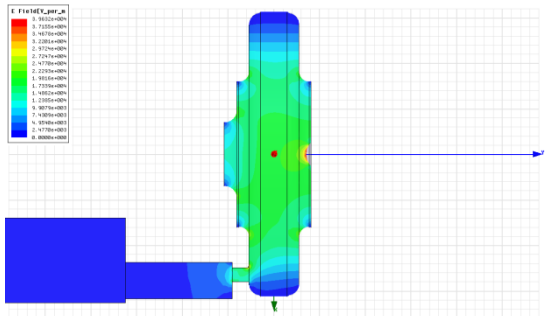

Gradient Pattern for the LBL Refurbished Pillbox cavity with two 2.54 cm diameter buttons longer length into the cavity (Final Testing arrangement). Greater gradient enhancement on the button tips and much less on the RF coupling aperture and iris.

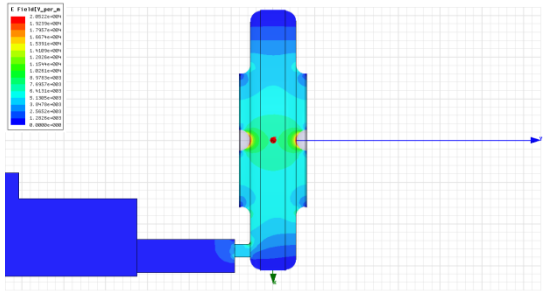

Testing Arrangements for the Pillbox cavity

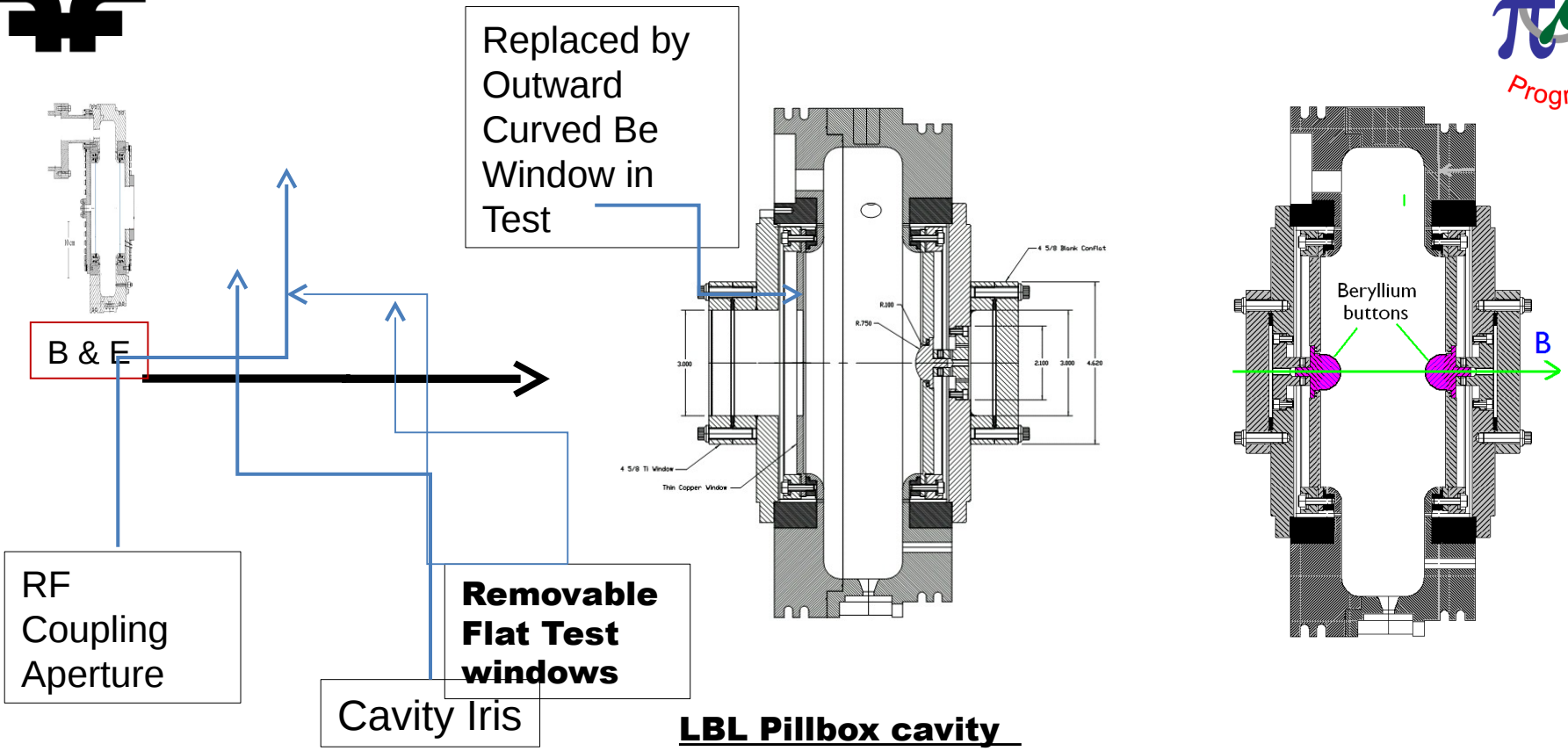

LBL Pillbox cavity With flat windows; the First RF commissioning Test arrangement cavity axial Length= 8.1cm

LBL Pillbox cavity with 3.81 cm dia single button and curved Be Window Testing arrangement. This was the first button Testing arrangement axial length =8.52 cm,

LBL Pillbox cavity with two 2.54 cm dia buttons Final Testing arrangement axial length =5.56 cm

Observed Sparking Damage on the Cu Iris in the 2 Button cavity after Testing with Flat Cu Windows and Buttons

Close up View of spark Damage at 3 O'clock

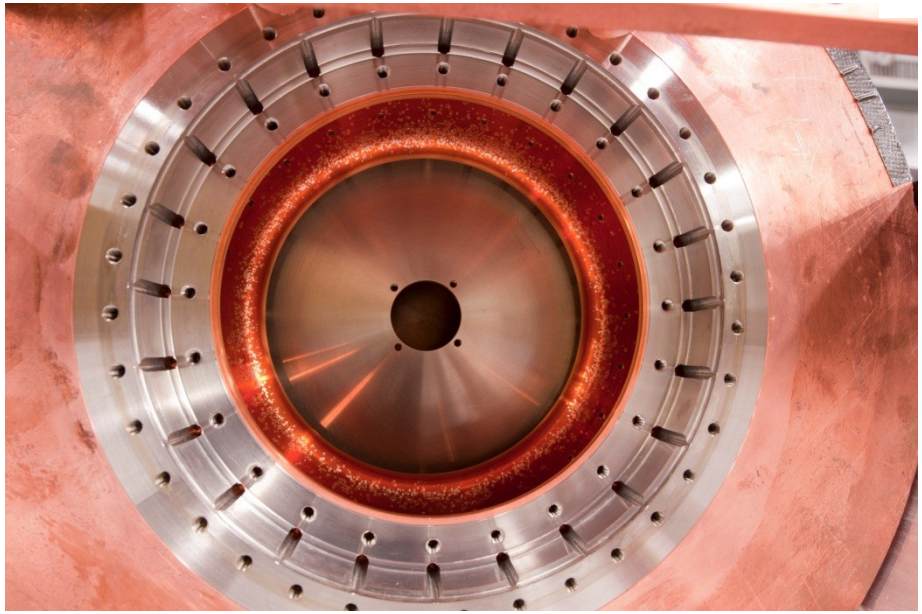

Far View of the Spark Damage on the Cu cavity iris after Flat window testing. It remained the same after testing with Cu and Be buttons. The windows also had uniform sparking of its surface. This was not the case for the Pillbox with Flat windows and single buttons. The Cu iris was damaged mainly between 11 to 1 O' clock at the top near coupler and 5 to 7 O' clock at the bottom on both sides.

“A cavity for all seasons”

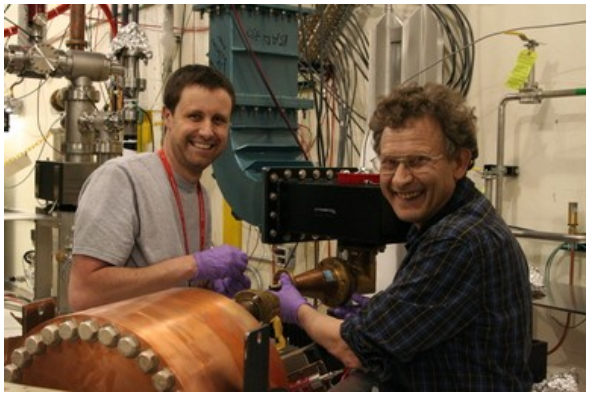

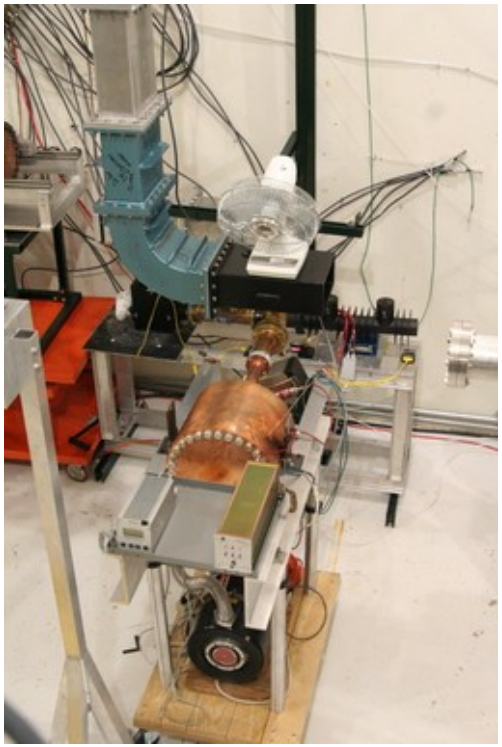

. Designed for both vacuum and high-pressure
- Vacuum only so far
- Operated outside and inside magnet
- 25 MV/m at B=0 and 3T
- Will run again soon with RF pickup installed
- Cause for gradient limit unknown
- Kazakevich et al., PAC11

Summary of tested Cu cavities

Cavity type	Magnetic Field T	Gradient Surface MV/m, 1/100,000 sparking rate	Cavity length cm
Pillbox Flat	3	16 & 10*	8.1
Pillbox 1 But	3	23	8.52
Pillbox 2 But	3	28	5.56
Orthogonal	0	50	12.38
All-Seasons**	3 & 0	25	15.0
6 Cell Open	3 & 0	53	16.2

*** 2 versions: original (16 MV/m) and refurbished (10 MV/m)**

**** The All-Seasons cavity was not instrumented with a cavity Voltage pickup during this test and it was difficult to determine the source of the sparking limit and even if it was sparking. The next test will be done with a Voltage pickup and if possible sparking light pickup.**

Summary of Gradient Breakdown results in the 6 Cell Open cell cavity in vacuum and in a 3 T field.

Summary of Gradient Breakdown results in the 6 Cell Open Cell cavity in vacuum and in a 3 T magnetic field after a 3 month of conditioning: The same results were reached in vacuum and in the magnetic field.

Average Accelerating Gradient = 20.5 MV/m,
Peak Surface gradient = 53 MV/m
Peak Cell Accelerating Grad = 23.5 MV/m.

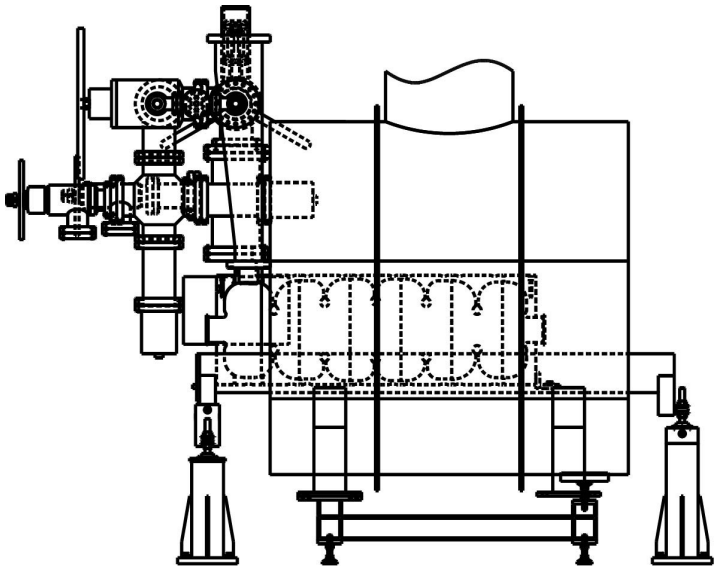

Orthogonal Breakdown Results vs. Angle between E/H

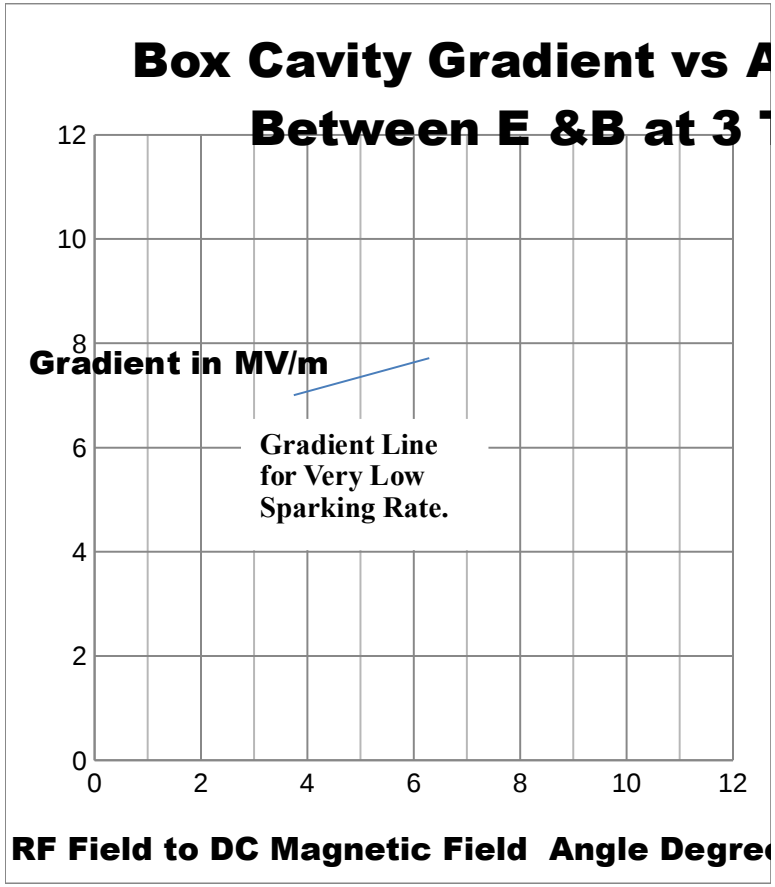

The Breakdown Curves versus E/H Angle.

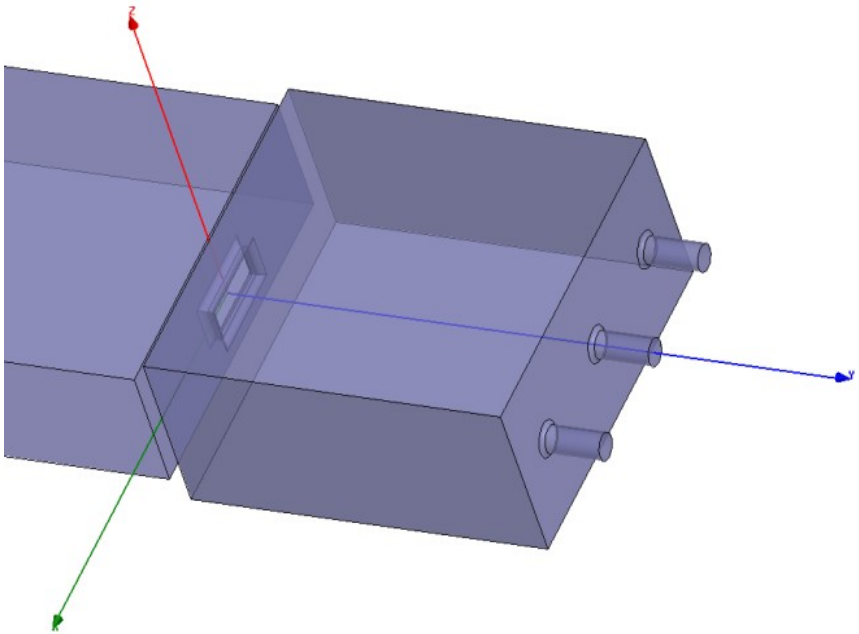

Fermilab Orthogonal Box Cavity

From Talk by Zenghai Li, SLAC, Showing Impact energy X Dark Current at various Gradients and Cavity lengths as Dark J Crosses Gap

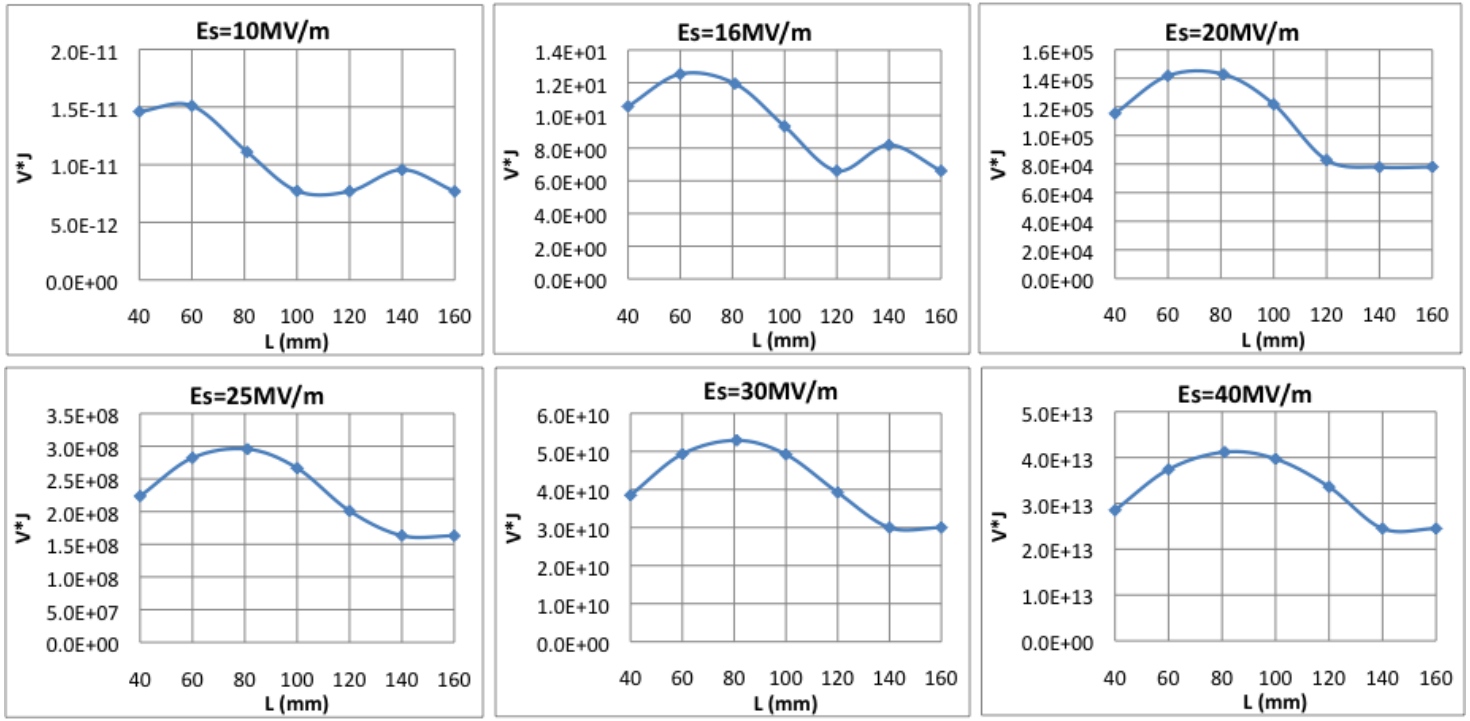

Observed that Between 16 to 40 MV/m that V*J is near a Minimum for cavity lengths of 140 to 160 mm and for all gradients is less than for a 80 mm length cavity.

Summary of Test Results in a 3 T Field and possible relation to Breakdown

- 8.1 cm long cavity with flat Cu windows 10* to 16 MV/m
- 16.2 cm Cell length Open cell cavity ~25 MV/m
  Gradient location of spark damage between irises
- 15 cm long All Seasons cavity 25 MV/m

Observed that Between 16 to 40 MV/m that V*J is near a Minimum for cavity lengths of 140 to 160 mm and for all gradients is less than for a 80 mm length cavity see page13.

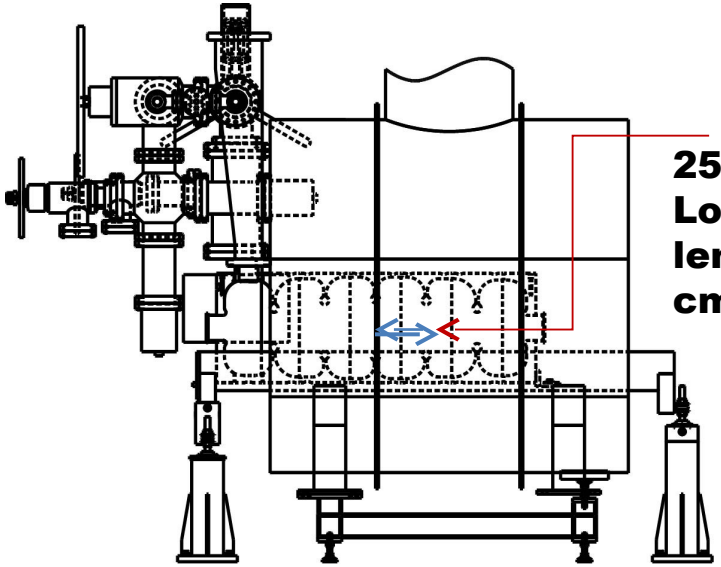

* This poor result may be due to surface contamination

Summary and Conclusions

- The maximum breakdown gradients observed in the testing of 5 cavity types has been presented , page 10.
- The gradient results for the 6 Cell Open Cell cavity, page 11, reached peak surface field of 53 MV/m
- Presented the results of Orthogonal, page 12, reached 35 MV/m
- Presented a possible case that cavities longer than 120 mm may operate to higher breakdown gradients in a 3 T magnetic field.