Synchronization Overview

S. Simrock, DESY

Outline

- What is Synchronization
- Synchronization Requirements for RF, Laser and Beam
  - Timing stability
  - RF amplitude and phase stability
- Design of RF synchronization systems
- Measured Performance
- Conclusion

Synchronization

- Definition of Synchronization
  - [1] coordinating by causing to indicate the same time
  - [2] an adjustment that causes something to occur or recur in unison
  - [3] the relation that exists when things occur at the same time
- What is to be synchronized in accelerators:
  - RF reference signals
  - Laser pulses (Photocathode laser, seed laser, pumpe-probe laser, new: master oscillator lasers)
  - Electrical and optical timing signals
  - Charged particle beams (bunch arrival time)

Synchronisation in FELs

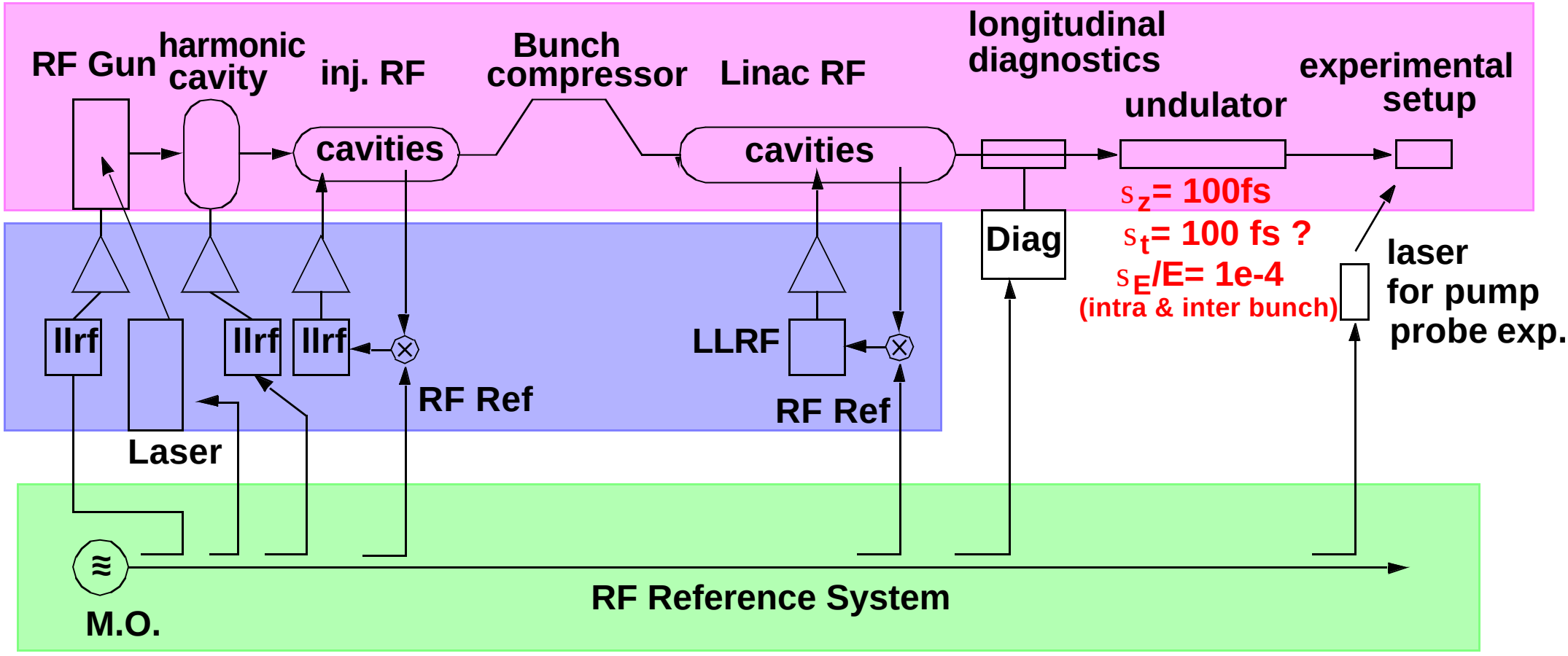

Synchronisation in ERLs (example)

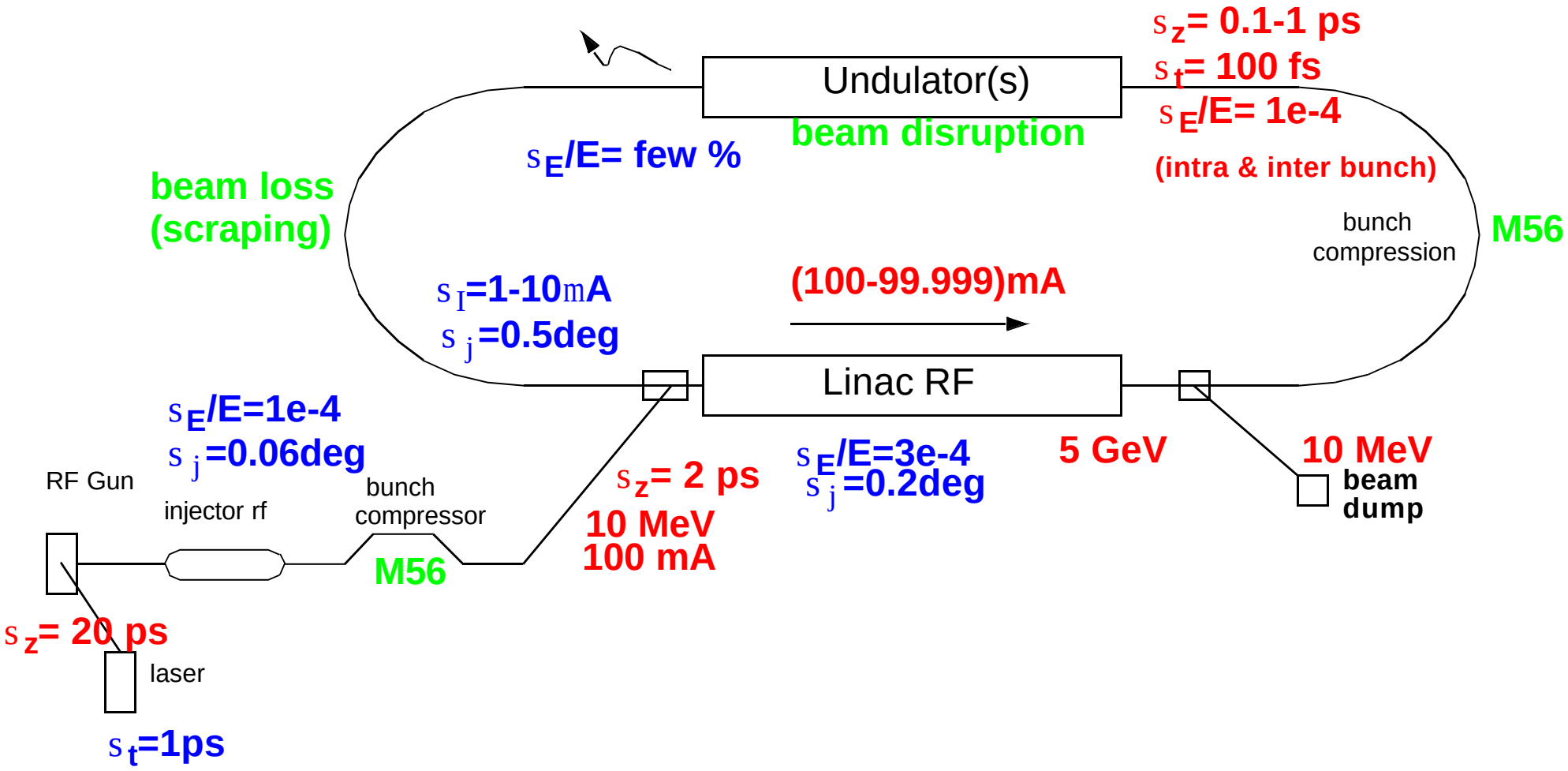

ERL Projects in the World

	Cornel CHESS	BNL PERL	LBNL LUX	BINP MARS	Daresbury 4GLS	Erlangen	
Beam energy	5.3	3-7	2.5-3.1	5.4	0.6	3.5	GeV
Max.Current	100	200	0.04	1.0	100	100	mA
Min.bunch length	0.3	0.1-0.4	0.05	<1	0.05	2	ps
Min.emittance	0.15	0.04		0.003	<1	0.3	nm

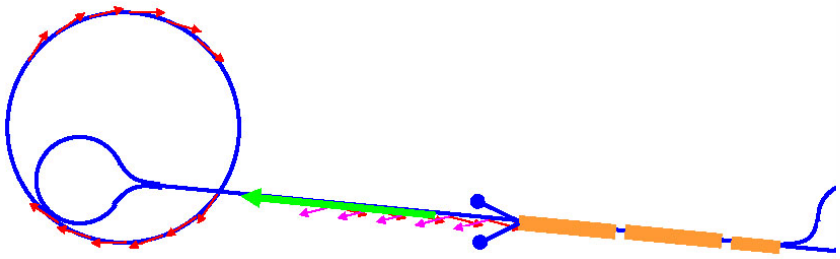

CHESS

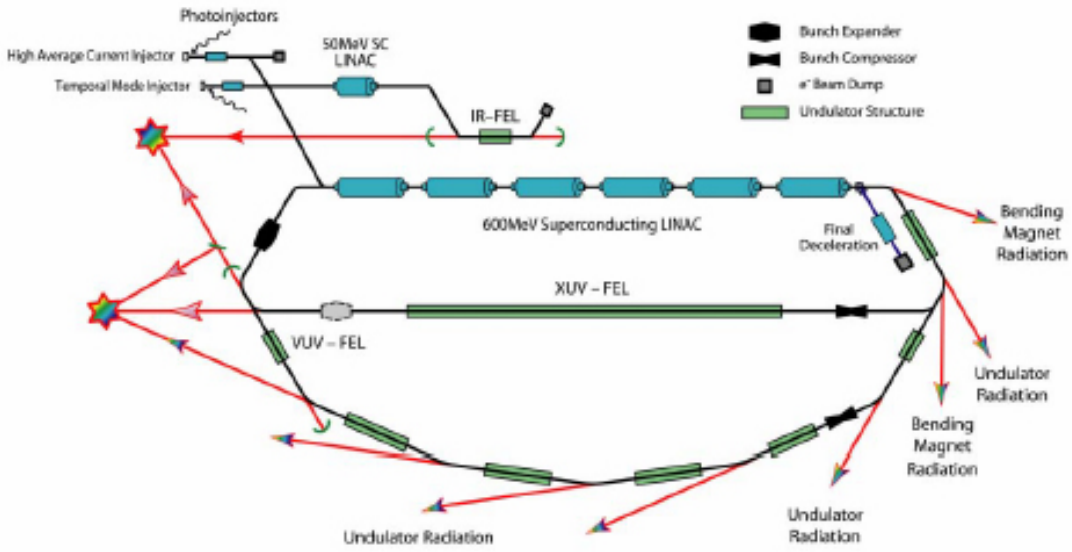

4GLS

Requirements

- Derived from beam parameters:
  - Energy Stability and Energy spread
  - Emittance
  - Bunch length
  - Arrival time
- Subsystem Requirements
  - Timing and Synchronization
    - Photocathode Laser, Seed laser, pump probe laser, beam diagnostics (streak camera)
    - RF reference frequencies
  - RF amplitude and phase stability (RF gun, Injector, Linac)

Error sources for timing, bunch length and energy spread in ERLs

- Laser timing jitter (reduced by bunch compressor)
- RF Stability
  - RF Gun
  - harmonic cavity
  - rf section before bunch compressor (off-crest)[1]
  - linac rf[2]
- Stability of magnets (bunch compression, phase for energy recovery)

---

1. Requires up to 1e-4 for ampl. and up to 0.05 deg. in phase
2. Disturbed by beam disruption in beam insertion devices (undulators) and beam instabilities (BBU)

Various factors may affect beam performance

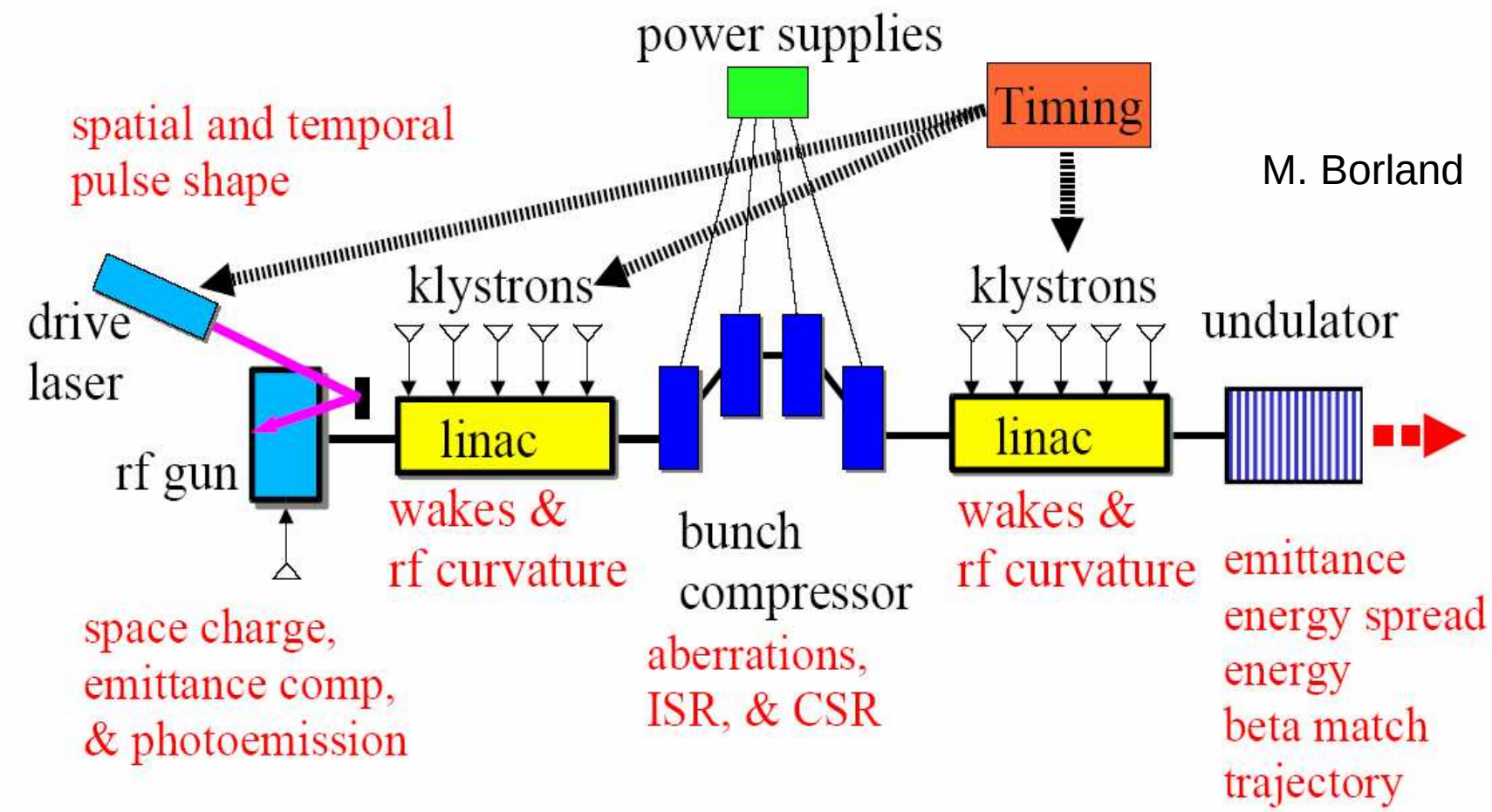

Jitter budgets for LCLS and TESLA

for 0.1% energy spread and 12% current modulation.

(without beam arrival timing requirement)

P. Emma, T. Limberg

Set up timing jitter budget, compare LCLS and TESLA XFEL

Table 2. A possible longitudinal jitter tolerance budget for LCLS and TESLA-XFEL.

$|\langle \Delta E/E_0 \rangle| < 0.1\%$ and $|\Delta I/I_0| < 12\%$

Parameter	Symbol	LCLS	XFEL$_J$	Unit
Gun timing jitter	Δt_0	0.80	1.5	psec
Initial bunch charge	$\Delta Q/Q_0$	2.0	10	%
mean L0 rf phase	φ_0	0.10	0.05	deg
mean L1 rf phase	φ_1	0.10	0.08	deg
mean Lh rf phase 3.9-GHz & X-band	φ_h	0.50	0.07	h-deg
mean L2 rf phase	φ_2	0.07	0.10	deg
mean L3 rf phase	φ_3	0.15	1.0	deg
mean L0 rf voltage	$\Delta V_0/V_0$	0.10	0.08	%
mean L1 rf voltage	$\Delta V_1/V_1$	0.10	0.20	%
mean Lh rf voltage	$\Delta V_h/V_h$	0.25	0.30	%
mean L2 rf voltage	$\Delta V_2/V_2$	0.10	0.20	%
mean L3 rf voltage	$\Delta V_3/V_3$	0.08	0.09	%

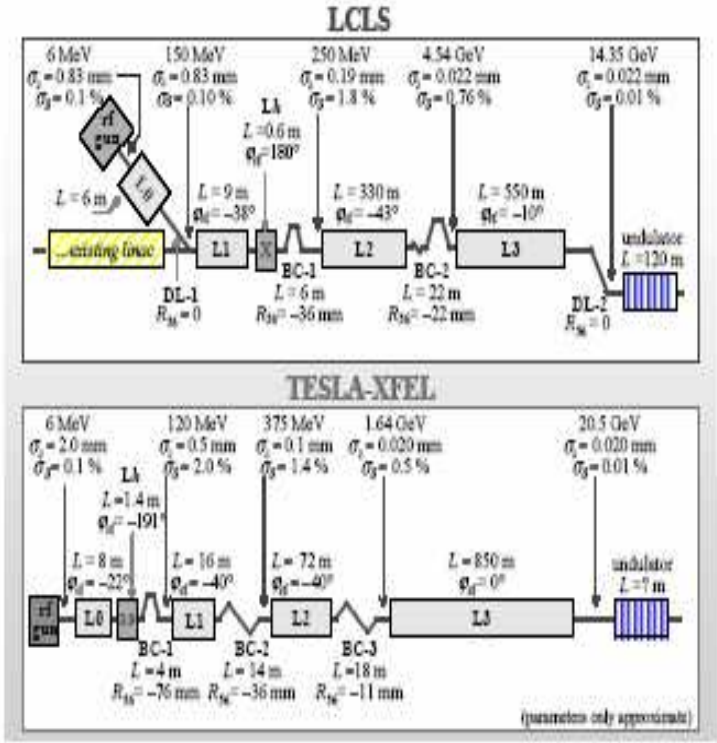

RF phase stability in some existing machines

measured RF stability
R. Akre, LCLS

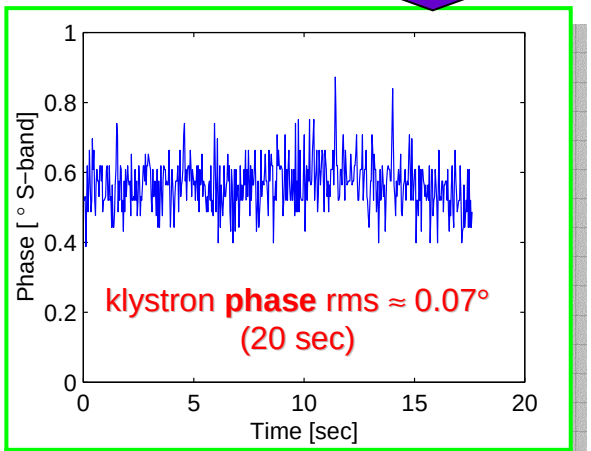

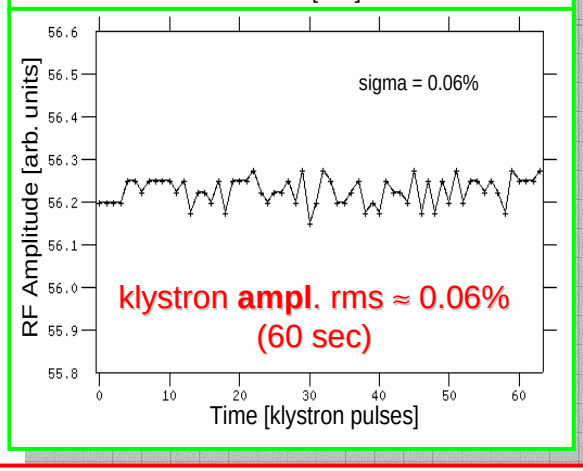

SPPS beam results suggest this RF stability already exists in SLAC linac

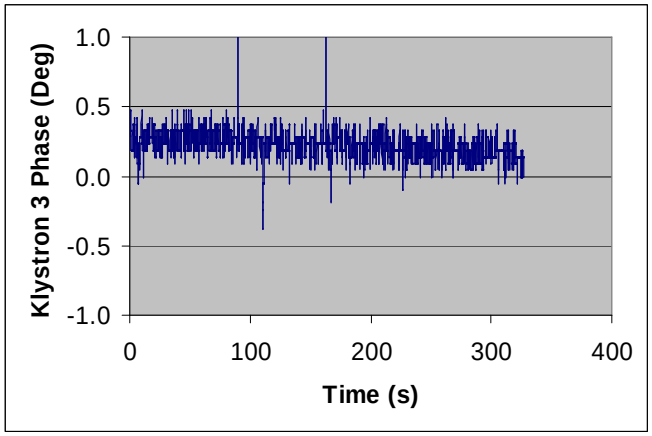

MIT Bates Linac RF
Zolfaghari, Cheever, Wang, Zwart

~0.07 degree(rms) level

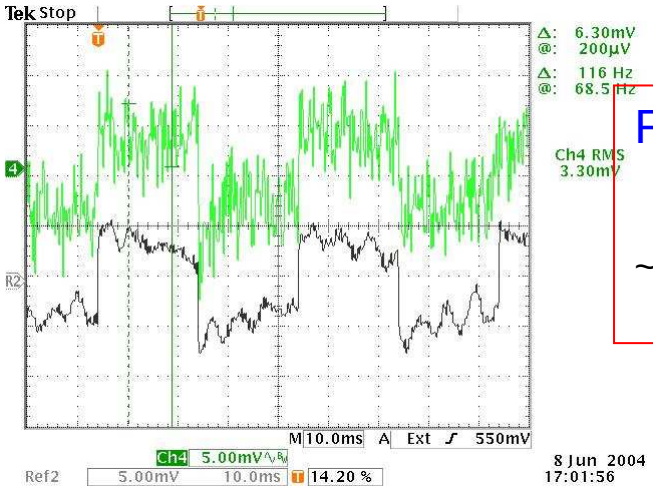

Rossendorf, cw scrf,
Gabriel

~0.02 degree (rms) level

JLAB, cw scrf, ~0.01 degree rms level
0.01% rms amplitude level

RF Regulation TESLA Cavity (Simulation)

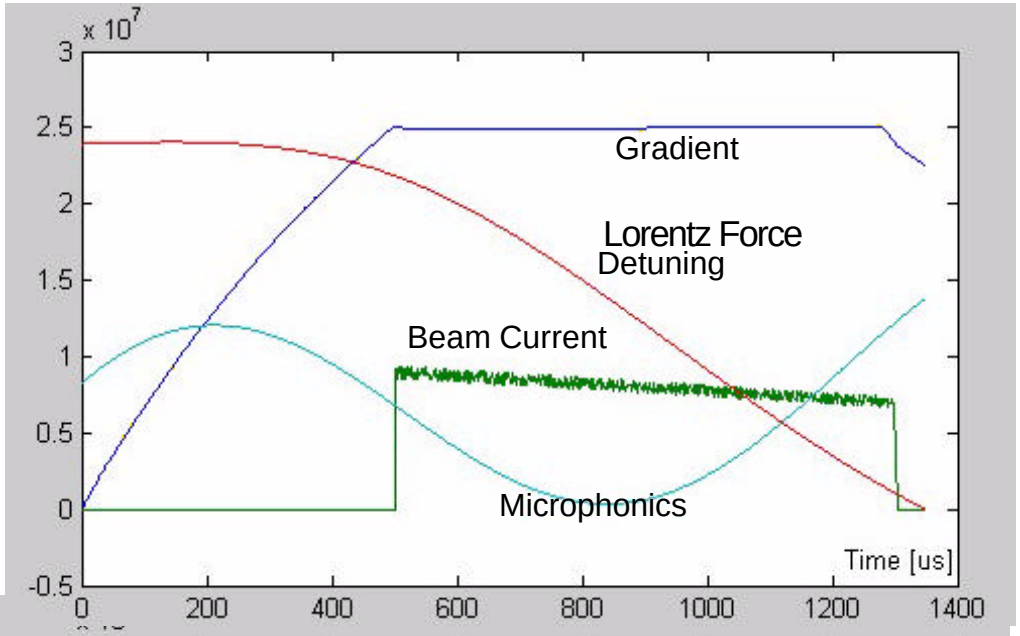

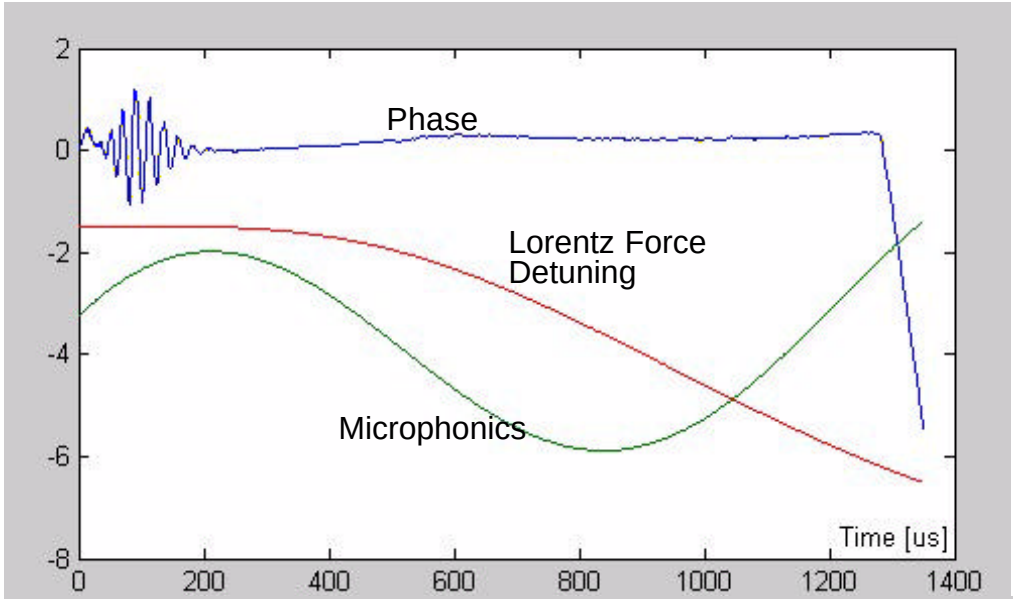

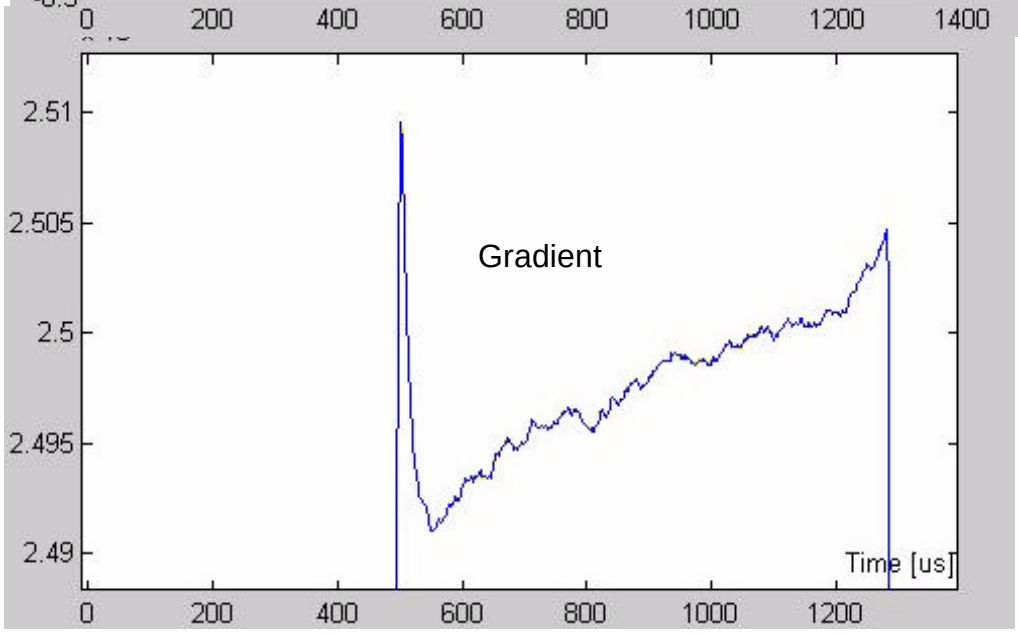

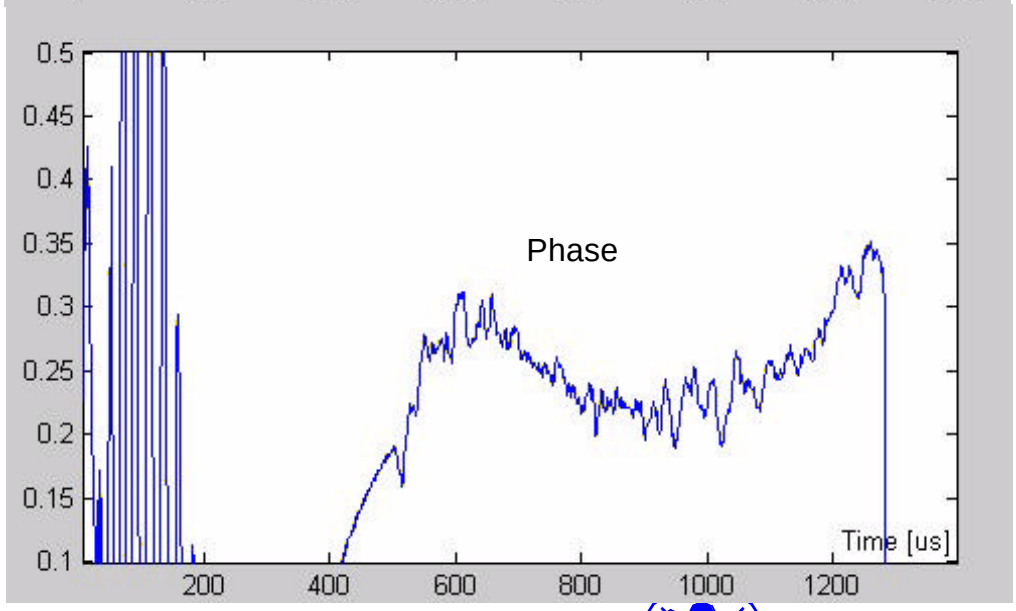

PLL Basics

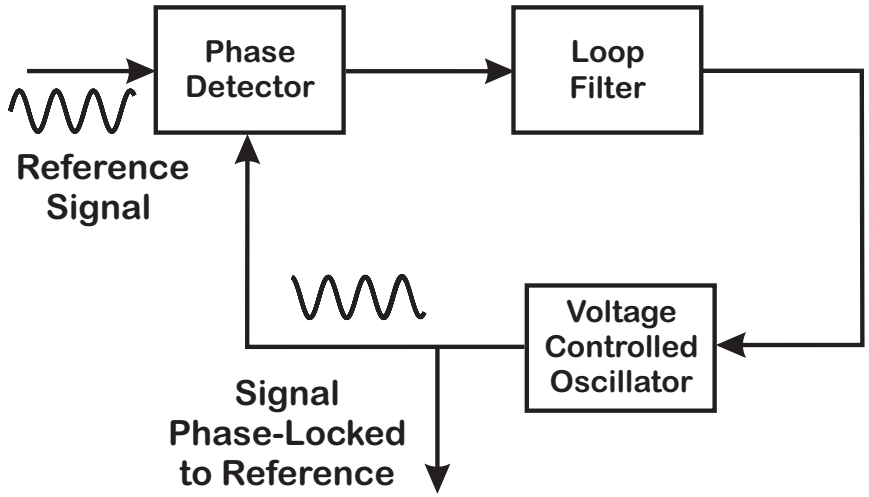

- Basic idea of a phase-locked loop:
  - inject sinusoidal signal into the reference input
  - the internal oscillator locks to the reference
  - frequency and phase differences between the reference and internal sinusoid $\Longrightarrow k$ or 0
  - Internal sinusoid then represents a filtered version of the reference sinusoid.
  - For digital signals, Walsh functions replace sinusoids.

General PLL Block Diagram

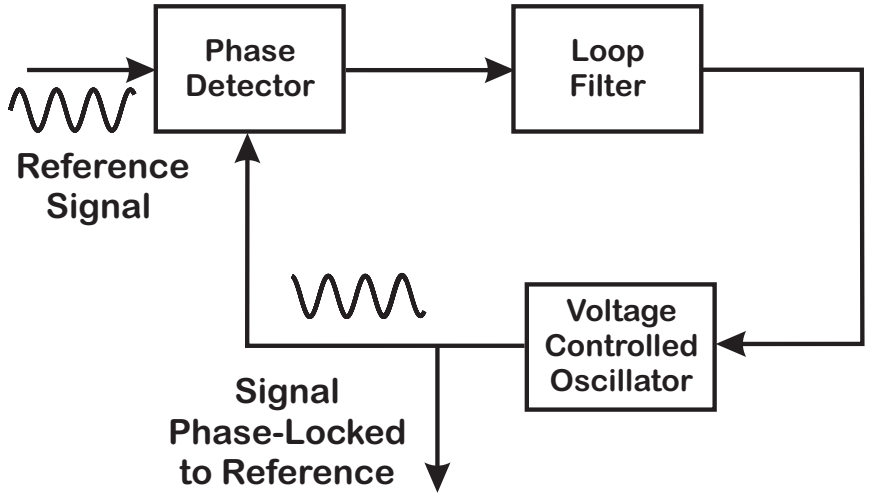

- A phase detector (PD). This is a nonlinear device whose output contains the phase difference between the two oscillating input signals.
- A voltage controlled oscillator (VCO). This is another nonlinear device which produces an oscillation whose frequency is controlled by a lower frequency input voltage.
- A loop filter (LF). While this can be omitted, resulting in what is known as a first order PLL, it is always conceptually there since PLLs depend on some sort of low pass filtering in order to function properly.
- A feedback interconnection. Namely the phase detector takes as its input the reference signal and the output of the VCO. The output of the phase detector, the phase error, is used as the control voltage for the VCO. The phase error may or may not be filtered.

Self Excited Loop

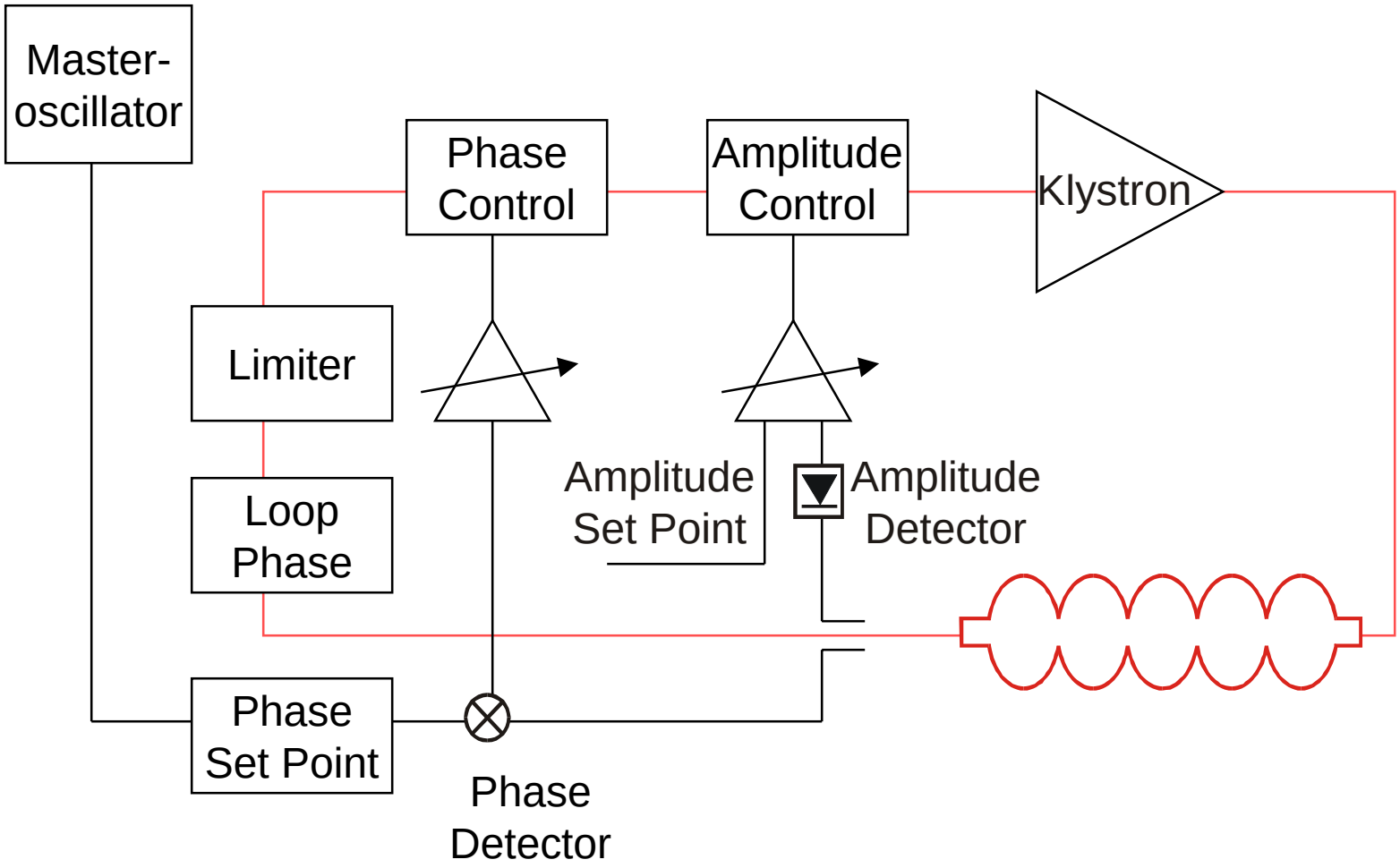

Phase noise and timing jitter

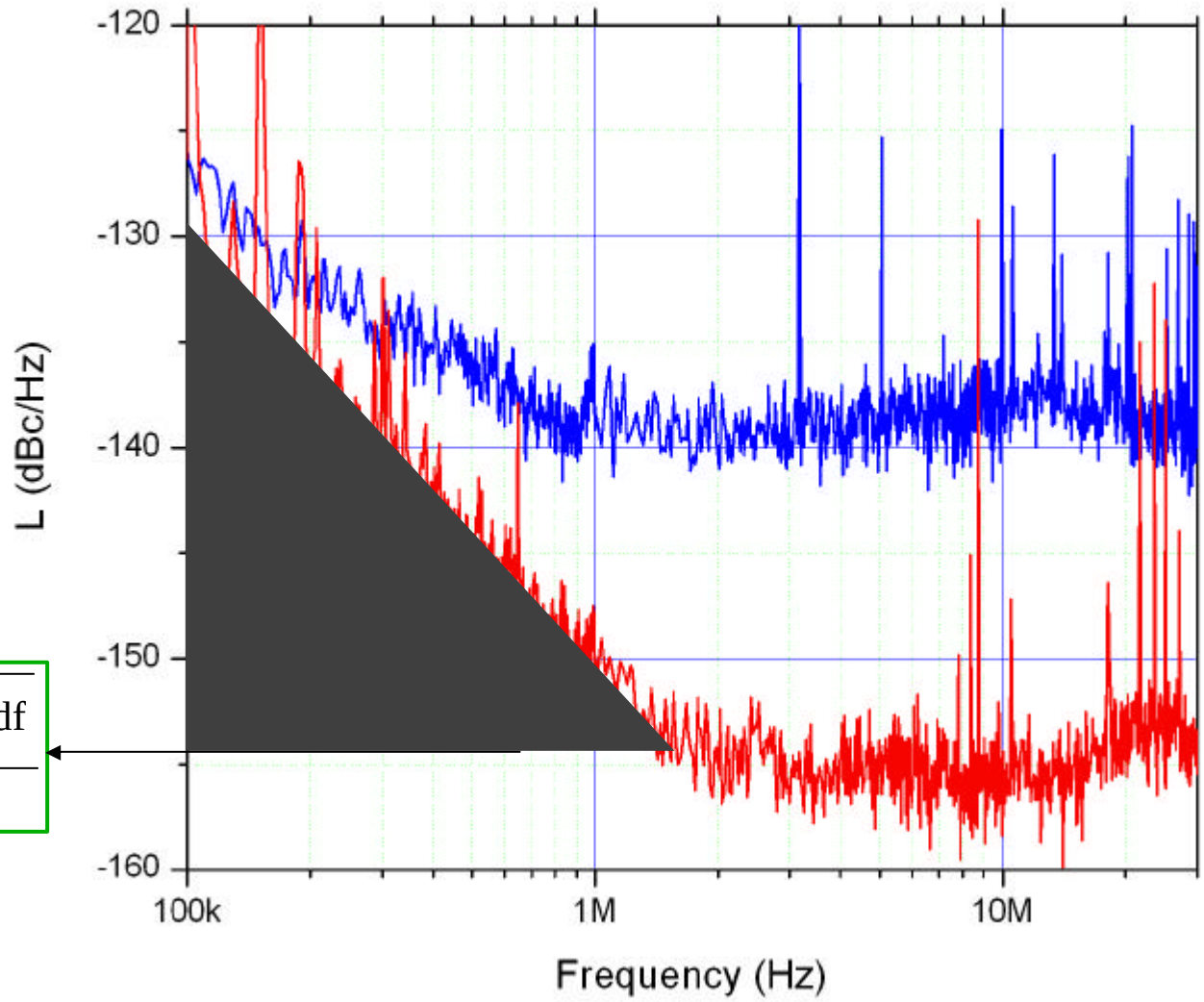

$$\Delta t_{rms} = \frac{\sqrt{2\int_{f_1}^{f_2} L(f)df}}{2\pi f_0}$$

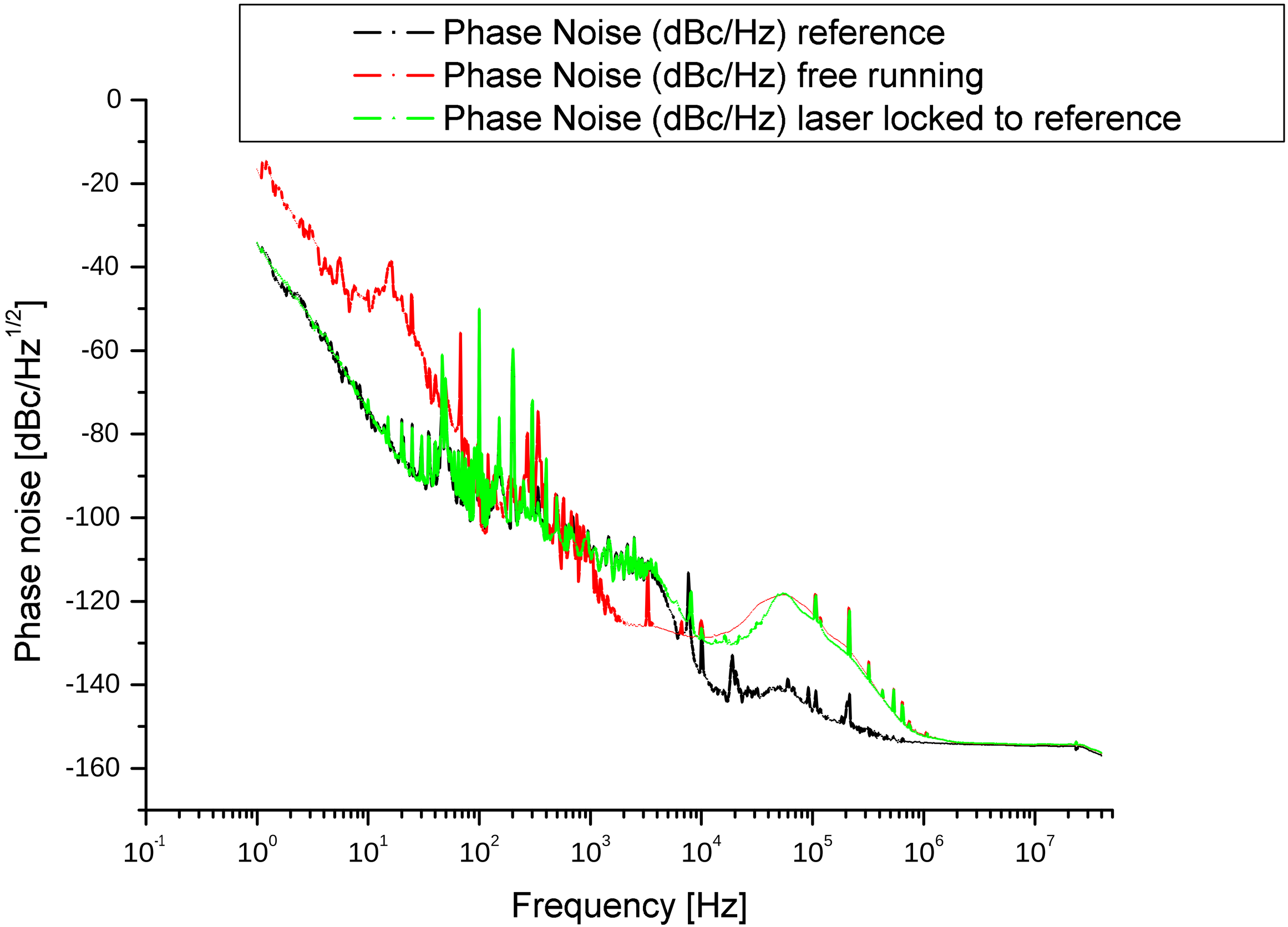
Phase Noise (dBc/Hz) reference
Phase Noise (dBc/Hz) free running
Phase Noise (dBc/Hz) laser locked to reference
Phase noise [dBc/Hz^1/2]
0
-20
-40
-60
-80
-100
-120
-140
-160
10^-1
10^0
10^1
10^2
10^3
10^4
10^5
10^6
10^7
Frequency [Hz]

Although there are very good low-noise sapphire loaded cavity oscillators

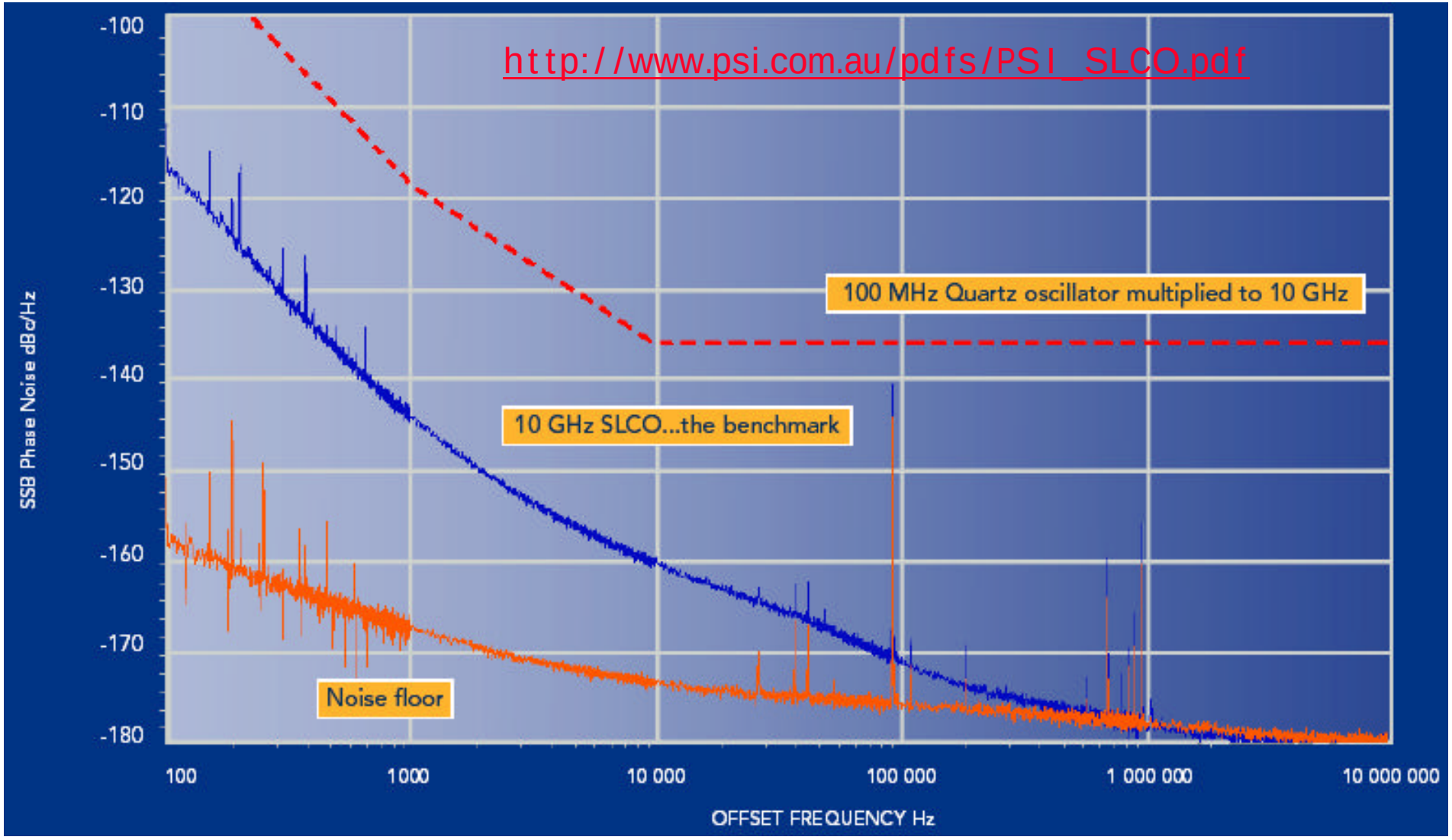

Phase noise spectrum requirement

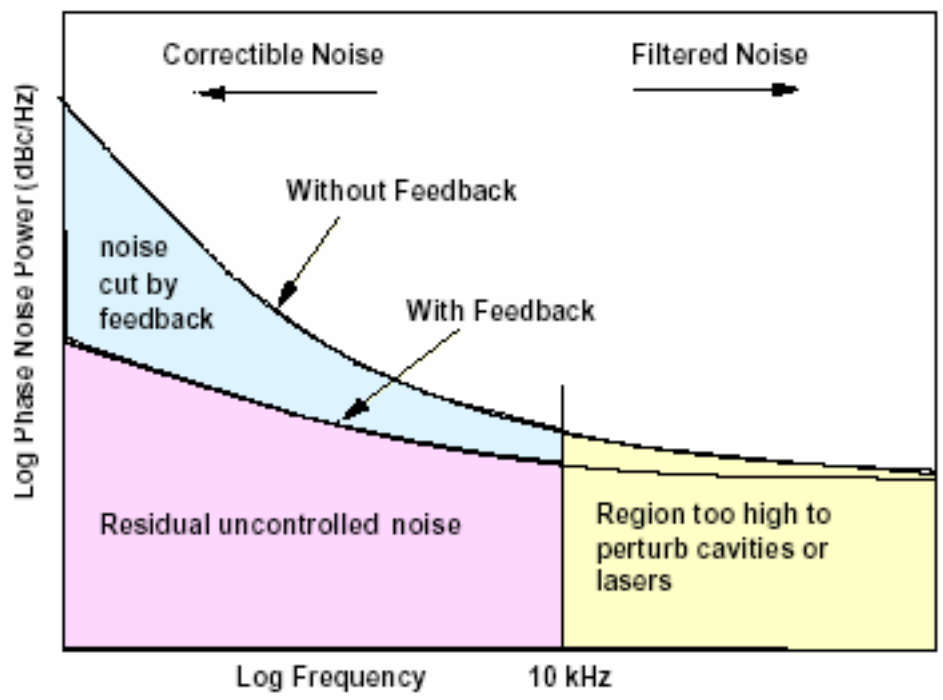

- **Master oscillator phase noise within bandwidth of feedback systems can be corrected**
- **Residual uncontrolled phase noise plus noise outside feedback systems bandwidth results in timing jitter and synchronization limit**

Performance Measured at JLAB

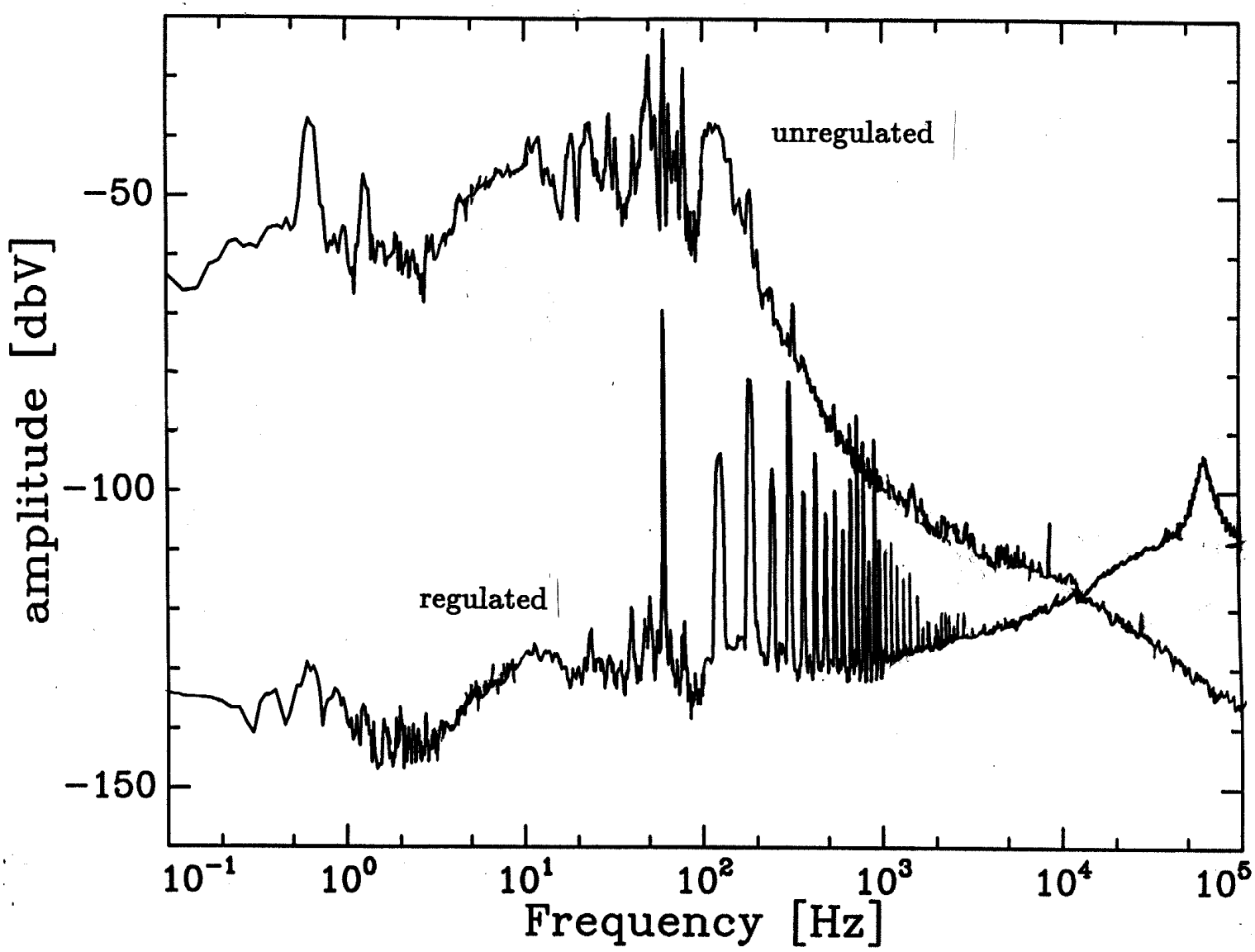

Bode Plot of Controller at JLAB

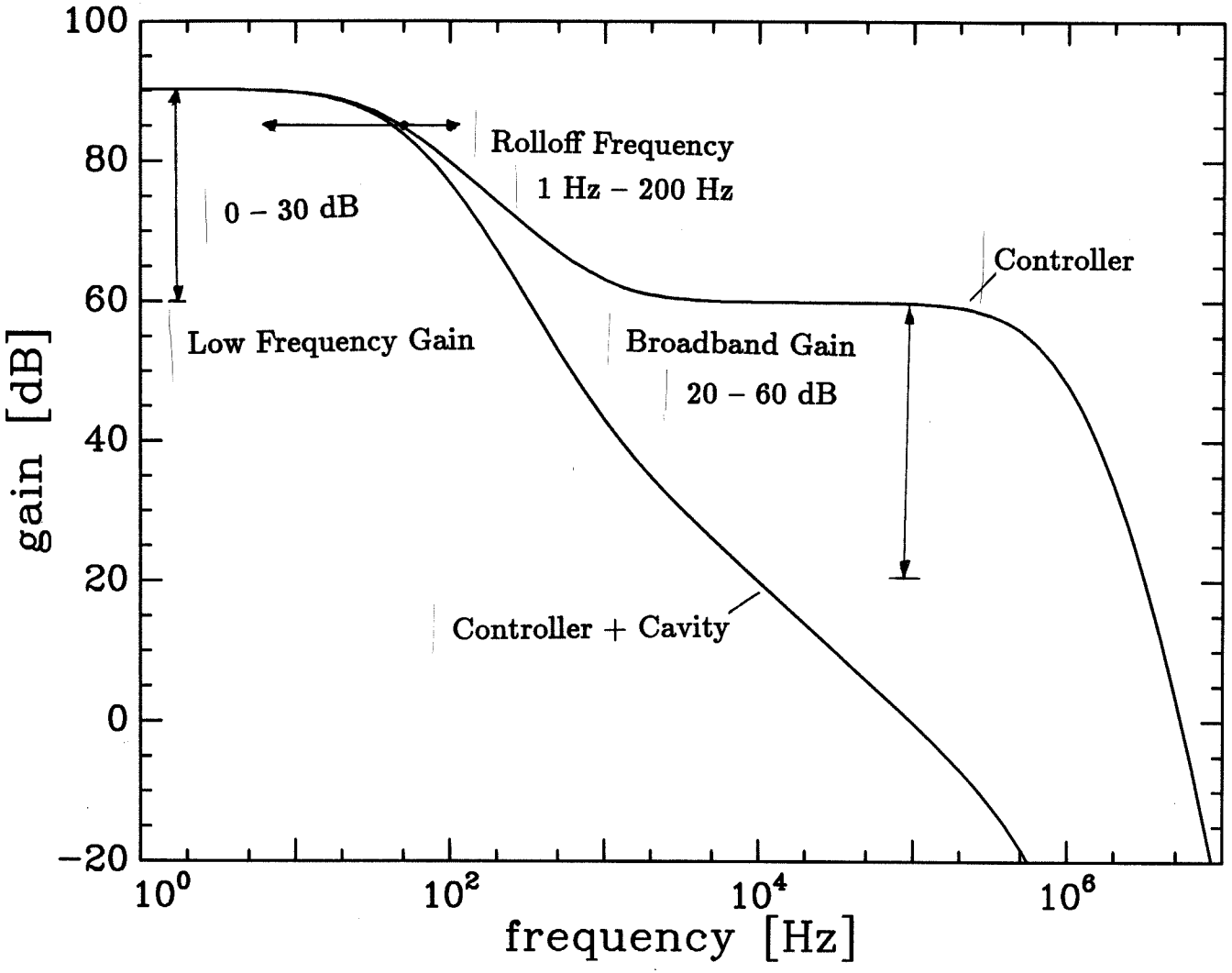

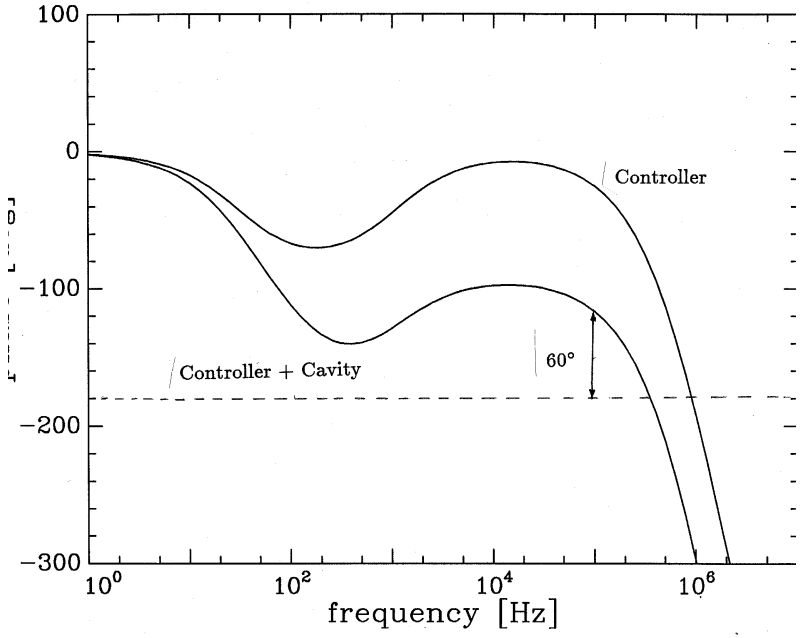

Noise characterization of the LLRF System (TTF2)

- **RF digital feedback system (TTF2) :**

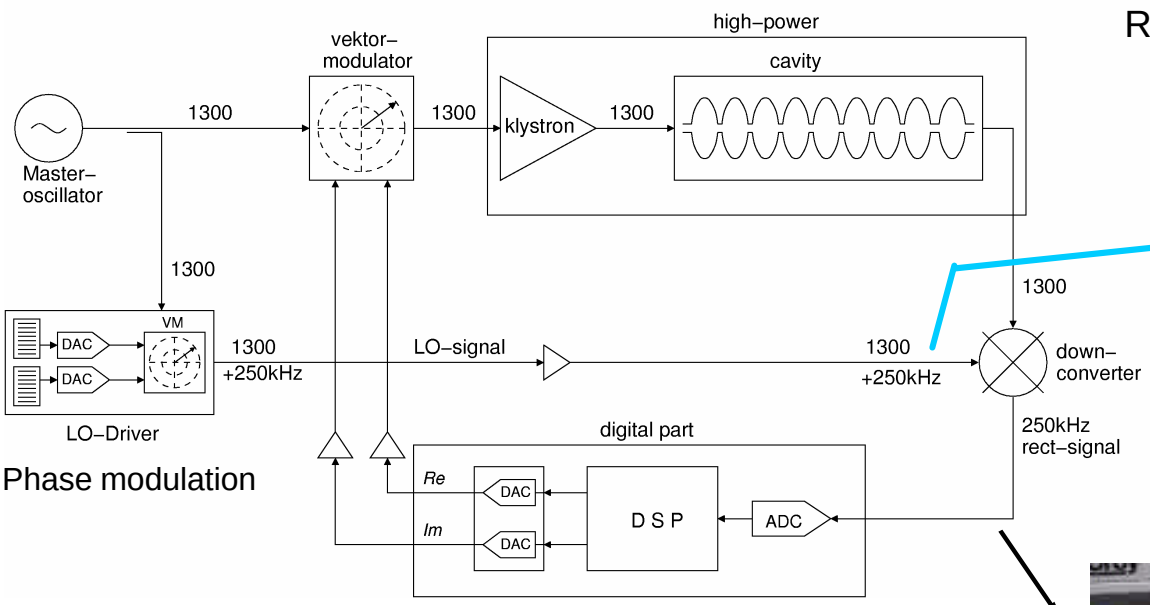

Phase modulation

- **+I,-I,+Q,-Q detection scheme :**

Rotation of the LO-signal in four 90° steps

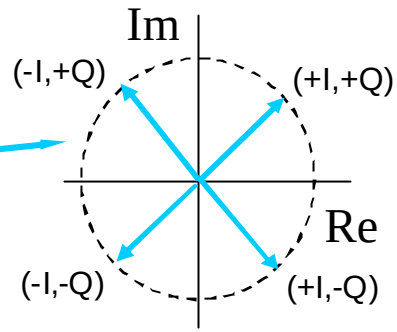

Bandwidth for transforming 250kHz squared pulses :

$$Df \approx 10MHz$$

Required regulation bandwidth only :

$$Df \approx 1MHz$$

Noise characterization of the LLRF System (TTF2)

- **Stability requirements on phase and amplitude of the cavity field vector :**

Amplitude stability : and linearity $\frac{dA}{A} < 10^{-4}$

Phase stability : $df < 0.01°$

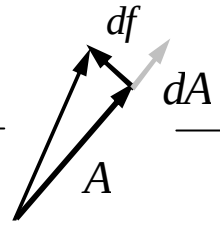

$dU_{XFEL} < 100\,\mu V$
(normalized to A=1V)

- **Noise measurement at input of an ADC :**

$dU_{TTF2} \approx 1.0mV = 10 \times dU_{XFEL}$

rms-voltage noise :

$$dU = \sqrt{\int_{Df} S_U(f)df} \approx \sqrt{S_U}\sqrt{Df}$$

+ *Reduce the measuring bandwidth*
+ *Low-noise design*
+ *Averaging, switched low-pass!*
- *Correlation methods*

Superposition of all noise contributions :

$$\sqrt{dU_{DWC}^2 + dU_{IQ}^2 + dU_{MO}^2 + dU_{extern}^2 + \ldots} < 100\mu V$$

Noise characterization of the LLRF System (TTF2)

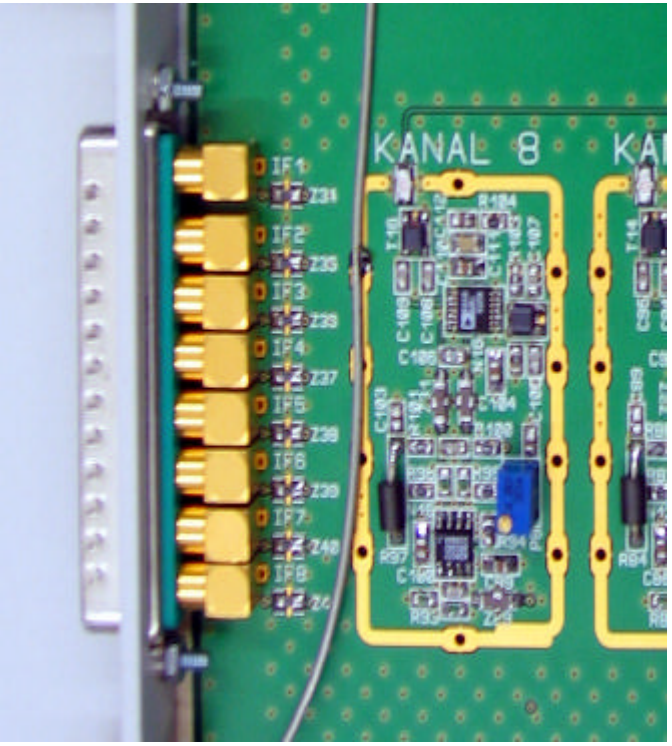

$P_{RF} \approx [-40\,dBm, -10\,dBm],\ -70\,dB\ \ linearity$

- **Noise from sensor (down-converter) :**

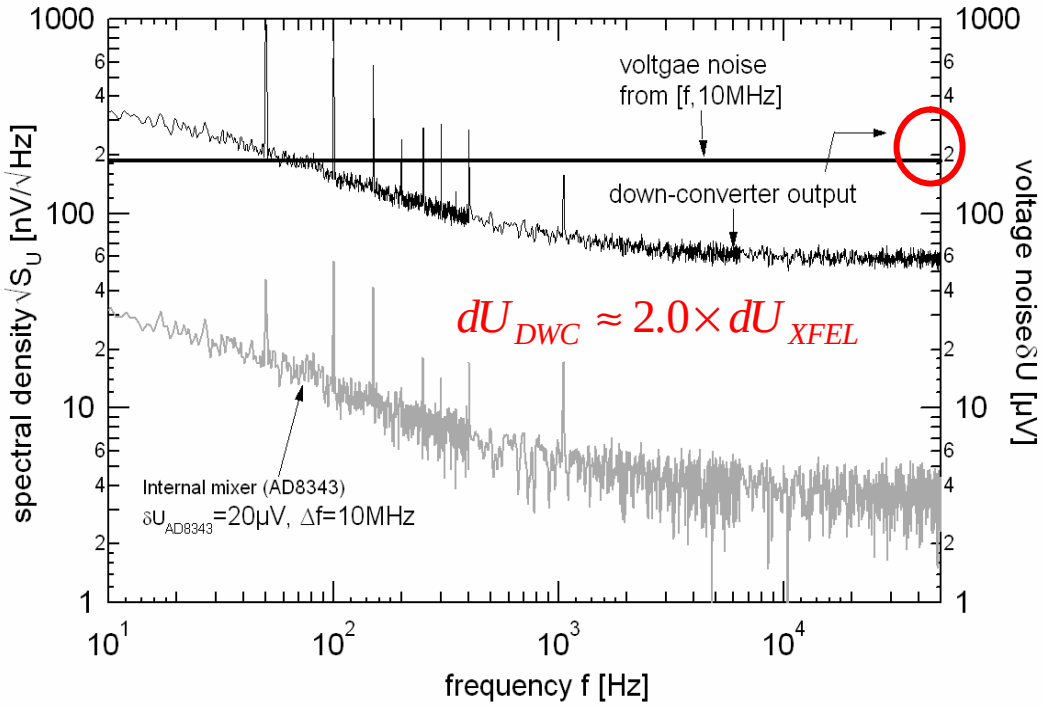

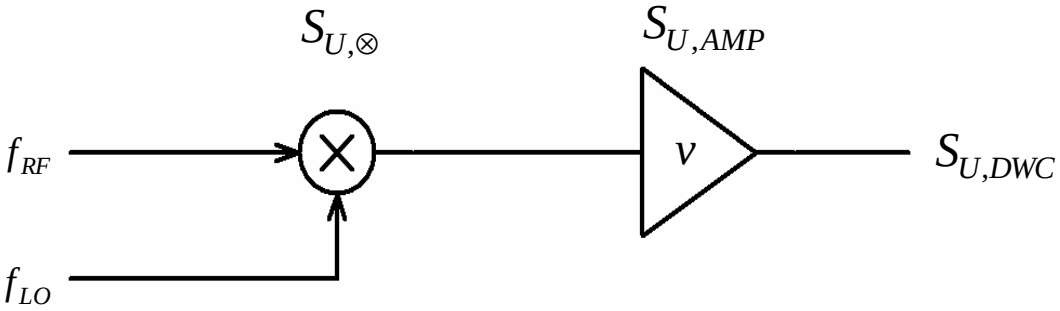

$$(S_{U,\otimes} + S_{U,AMP})\, v^2 = S_{U,DWC}$$

$$\sqrt{S_{U,\otimes}} \approx 4.5\,nV/\sqrt{Hz},\ v \approx 8.5$$

$$\sqrt{S_{U,AMP}} \approx 7\,nV/\sqrt{Hz}$$

$$\sqrt{S_{U,DWC}} \approx 70\,nV/\sqrt{Hz}$$

- **Noise conversion over the LO-Signal at down-converter from master-oszillator :**

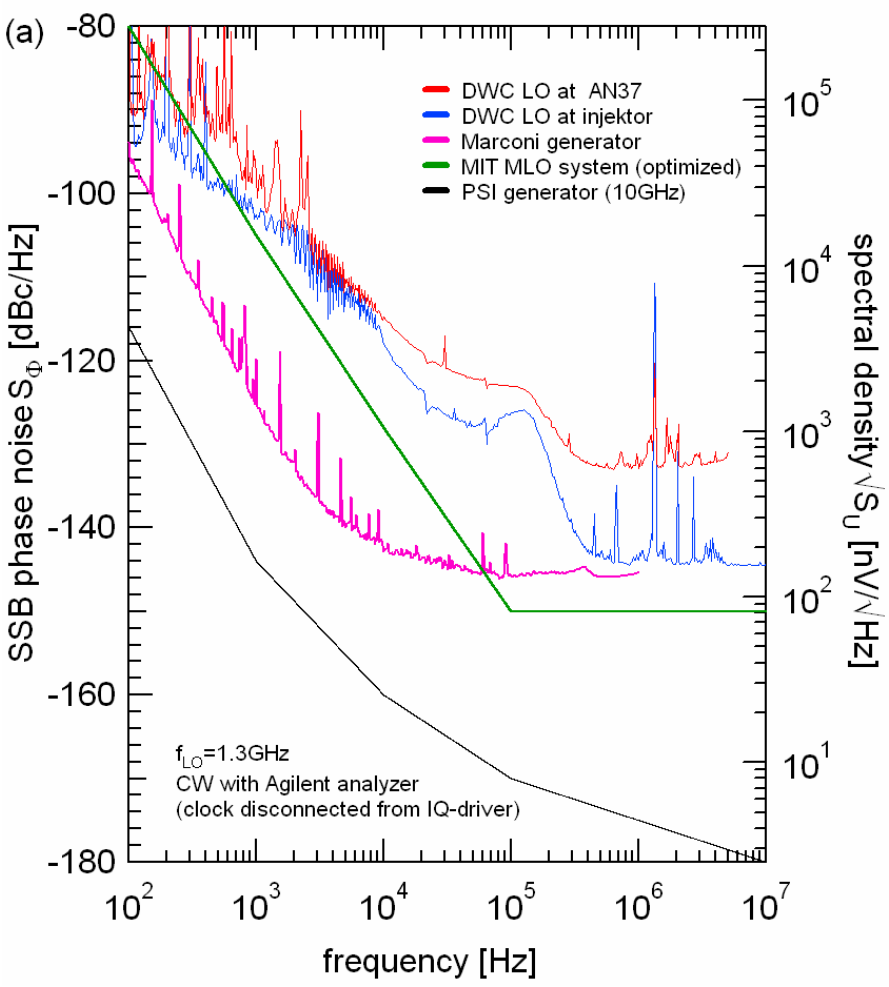

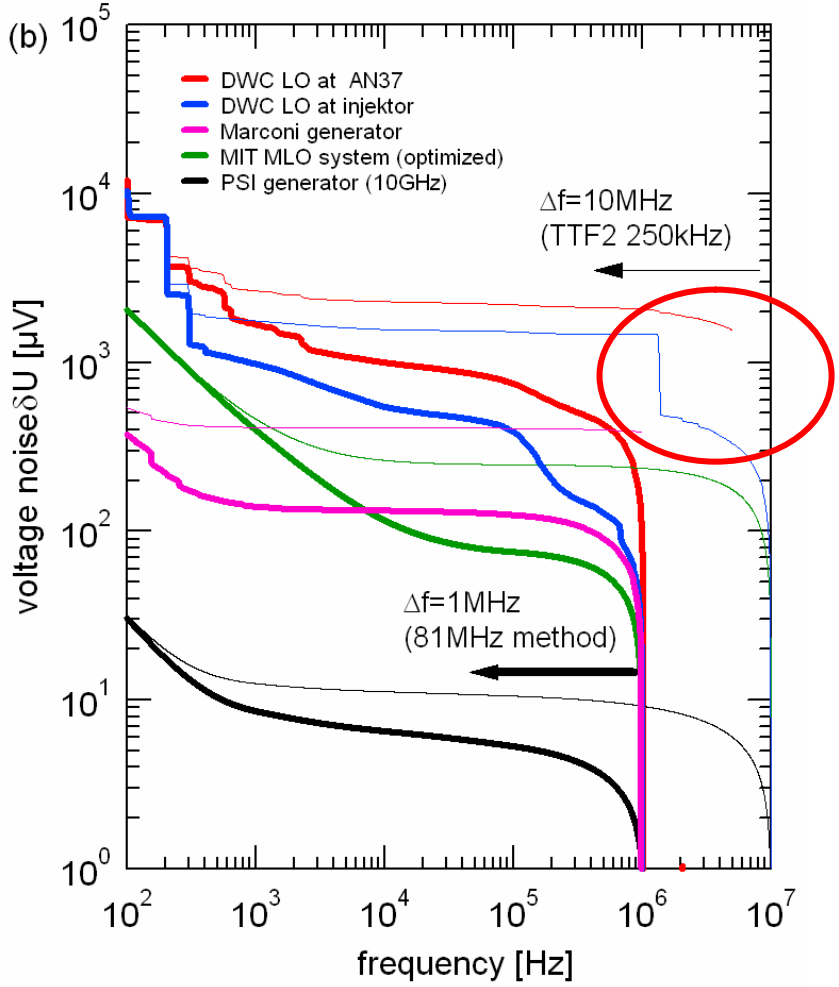

$$dU_{MO} \approx 10 \times dU_{XFEL}$$

Specifications

provide FEL pulse with some ten fs arrival time stability:

- amplitude and phase stability of RF in cavities in injector area
- stable reference distributed over 3.5 km to end of linac

Crucial are cavities up to bunch compressor. Jitter in I and Q of RF results in jitter in energy (off crest acceleration). Bunch compressor turns that into arrival time jitter.

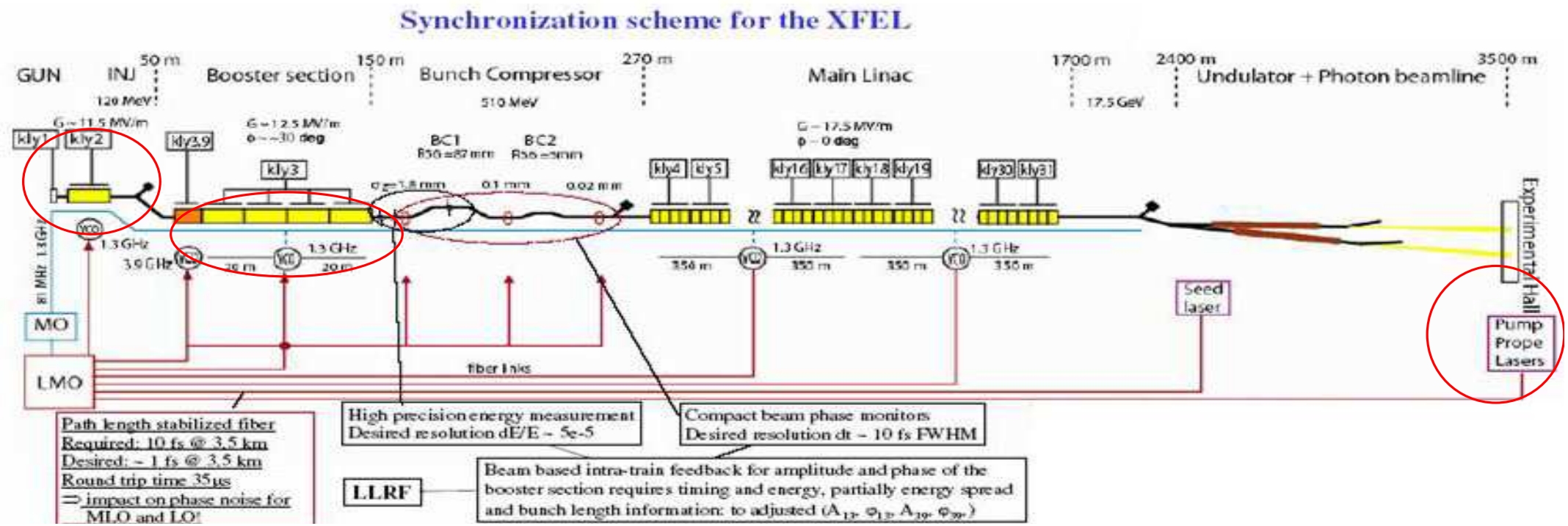

Modelocked fiber laser oscillator rf stabilized

Modelocked Fiber Laser Oscillator – RF Stabilized

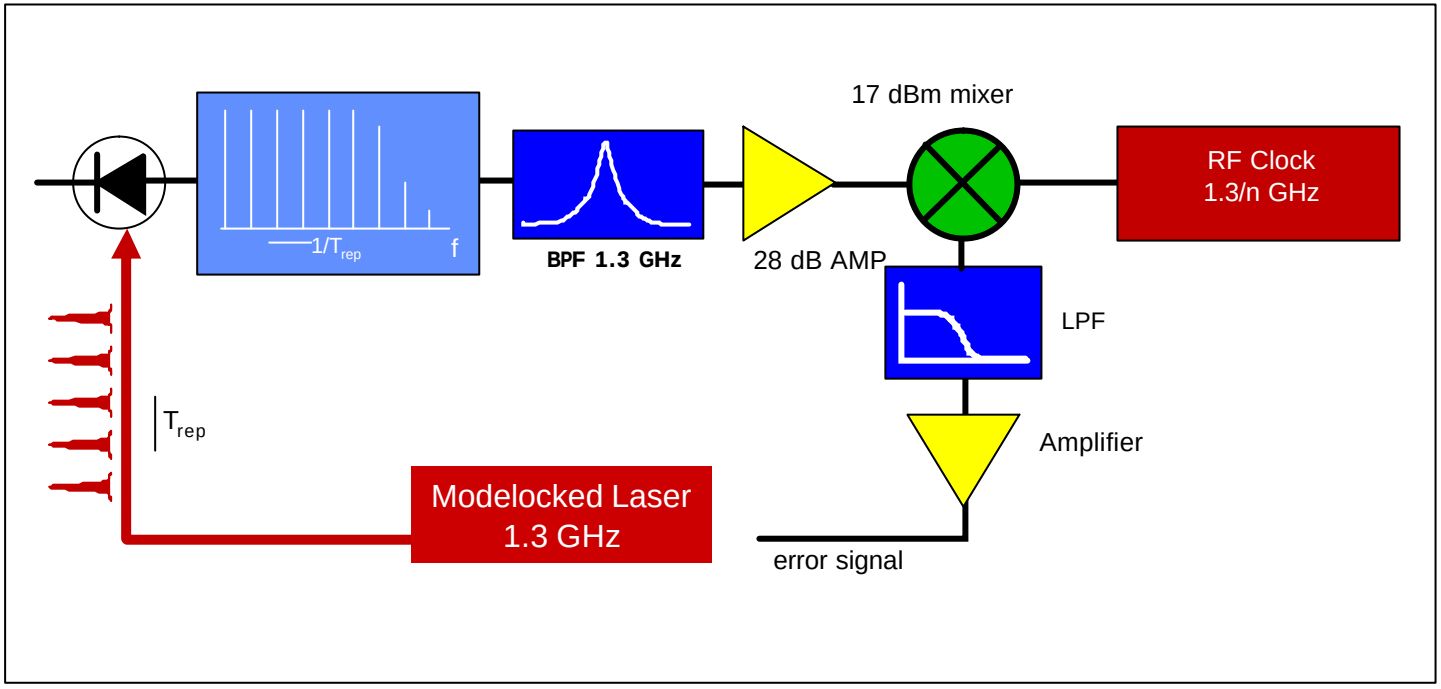

- **Phase-lock all lasers to master oscillator**
- **Derive rf signals from laser oscillator**
- **Fast feedback to provide local control of accelerator rf systems**
  - **Synchronization 10's fs**

Experimental Setup for RF Locking

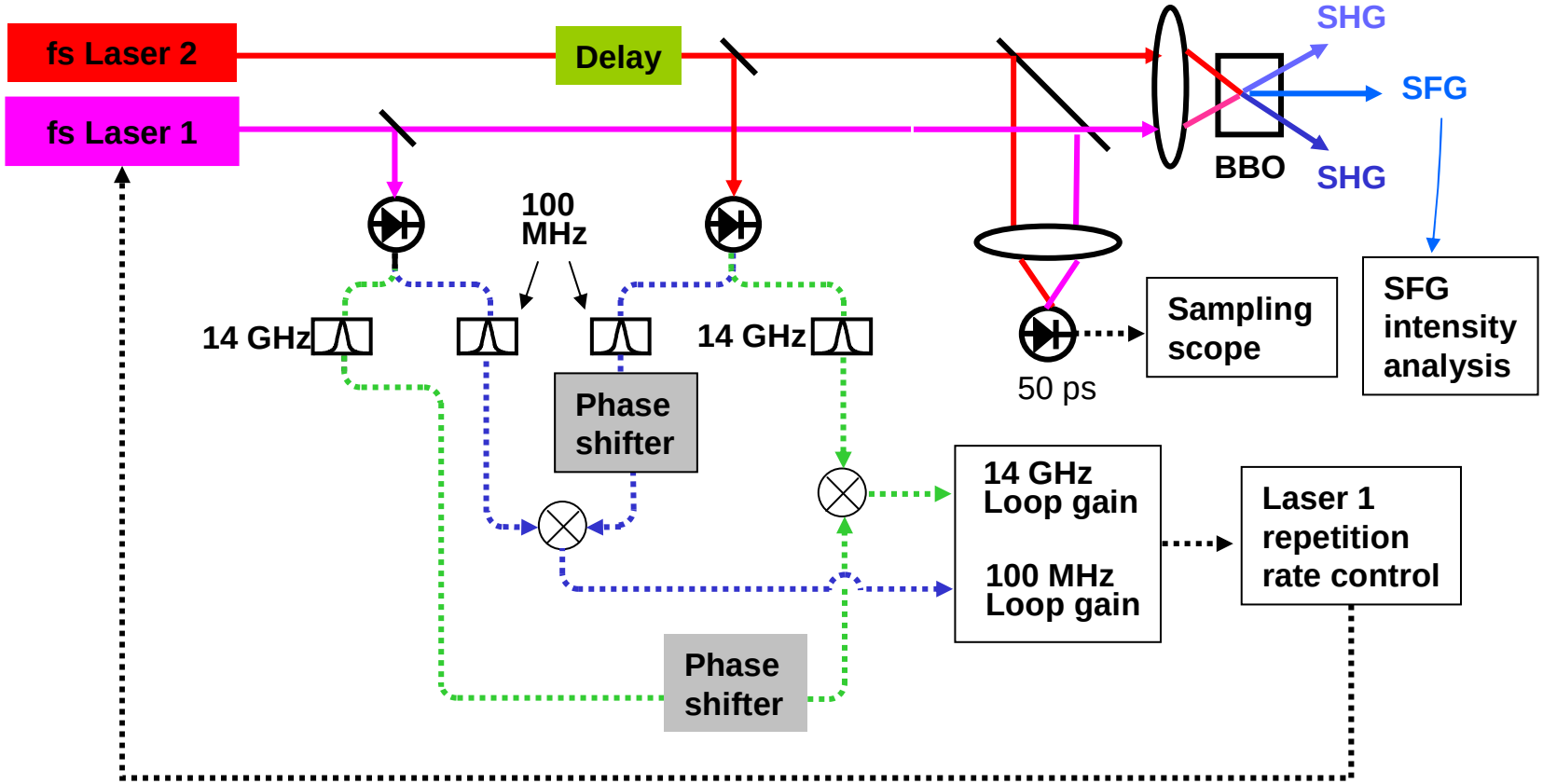

fs lasers share pump source, isolated optical table
RF phase shifter gives electronically addressable timing delay

Jun Ye's lab in collaboration with
Henry Kapteyan and workers

Timing Jitter via Sum Frequency Generation

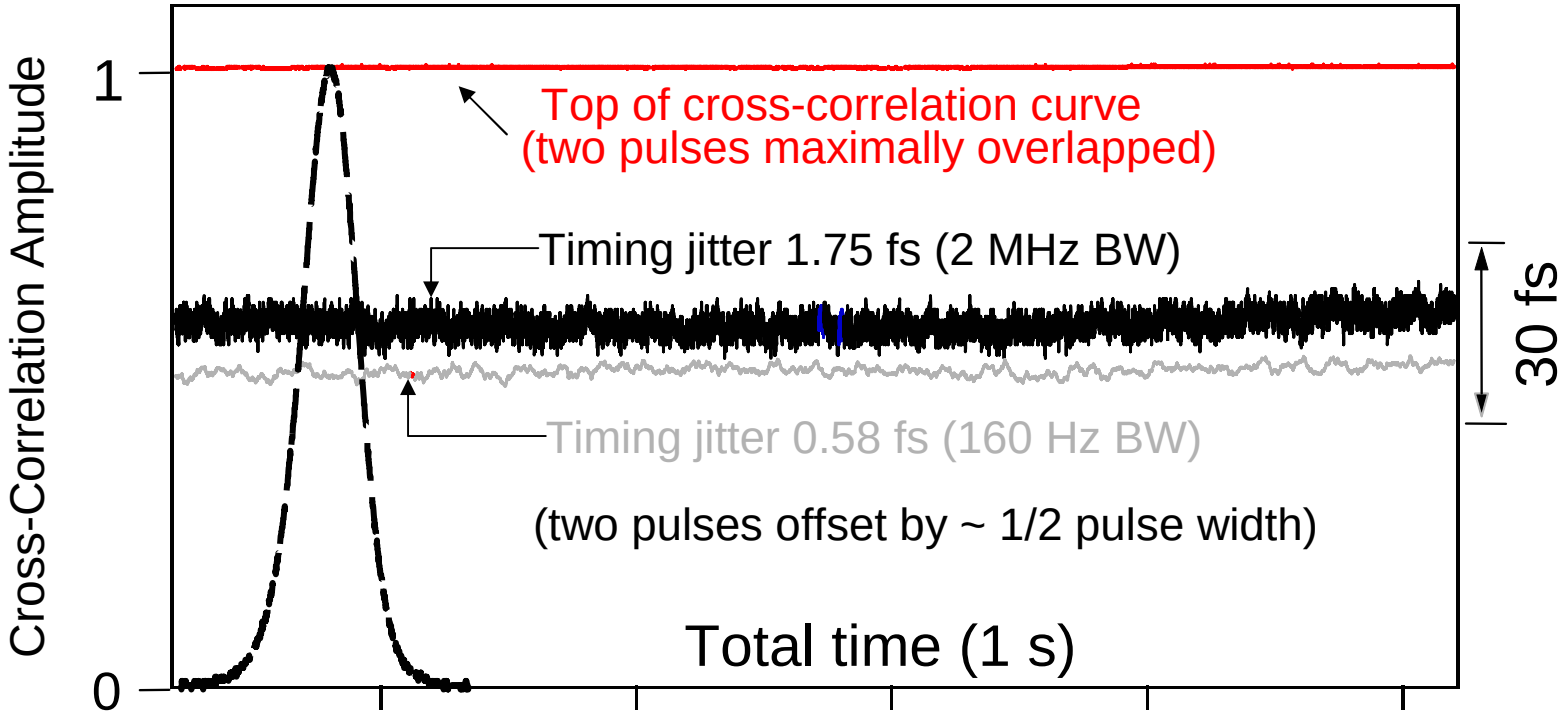

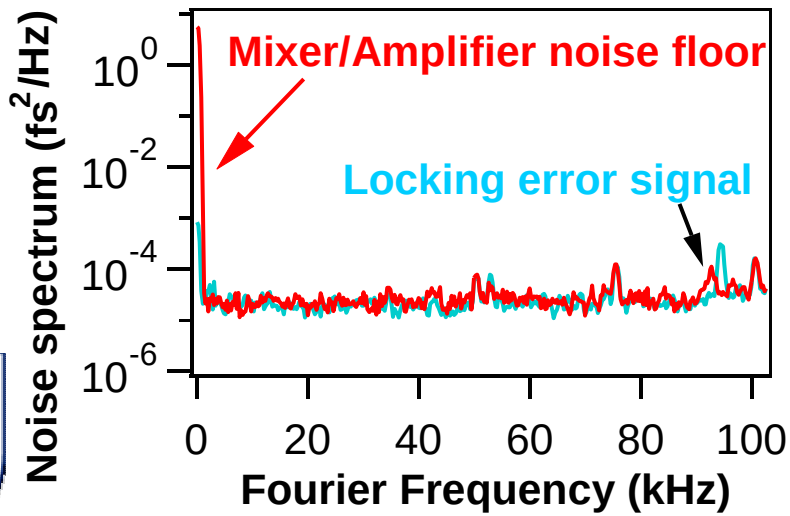

Ma *et al*., Phys. Rev. A **64**, 021802(R) (2001)
Sheldon *et. al*. Opt. Lett **27** 312 (2002) .

Balanced Cross-Correlator

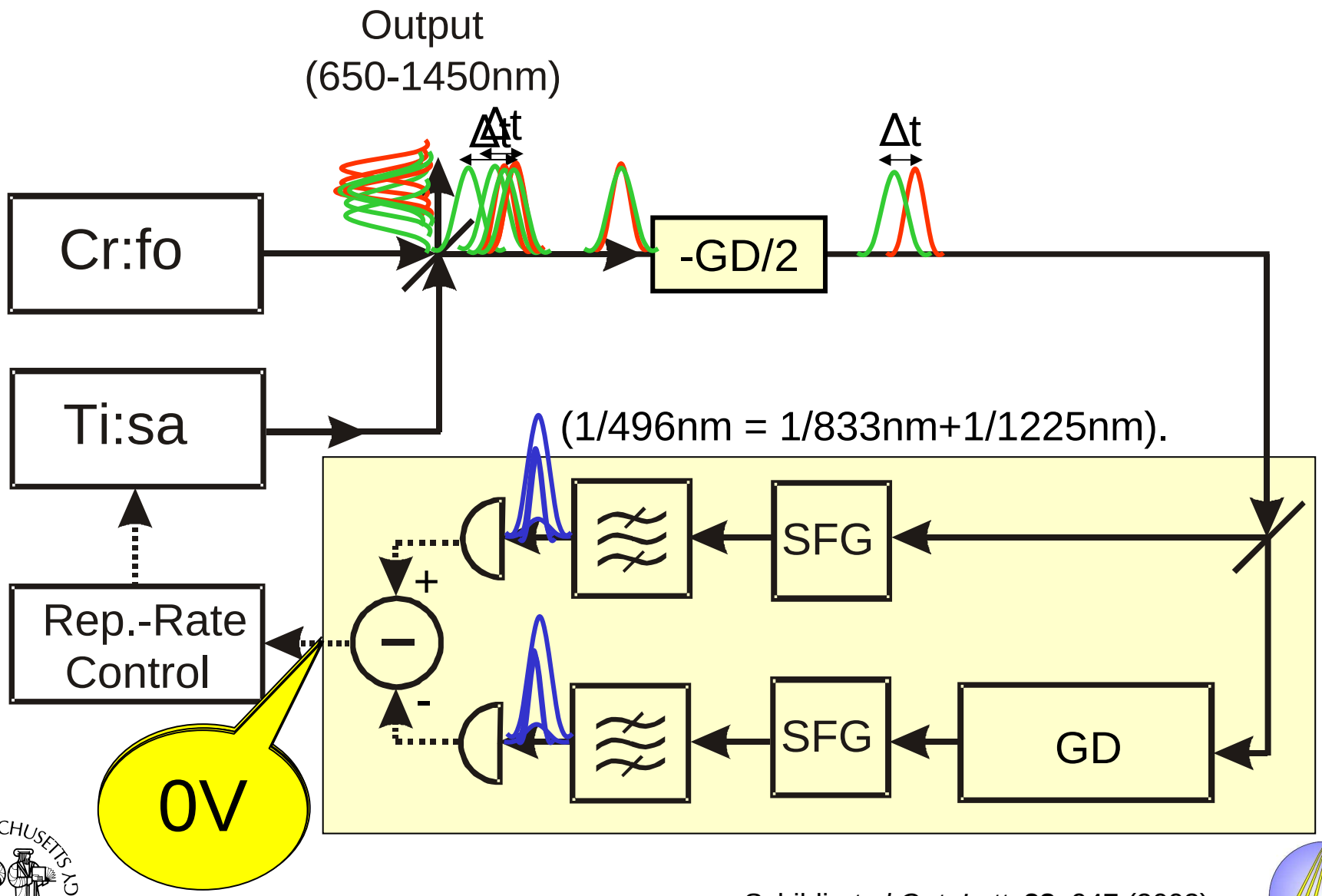

Schibli *et al Opt. Lett*, **28**, 947 (2003)

Balanced Cross-Correlator

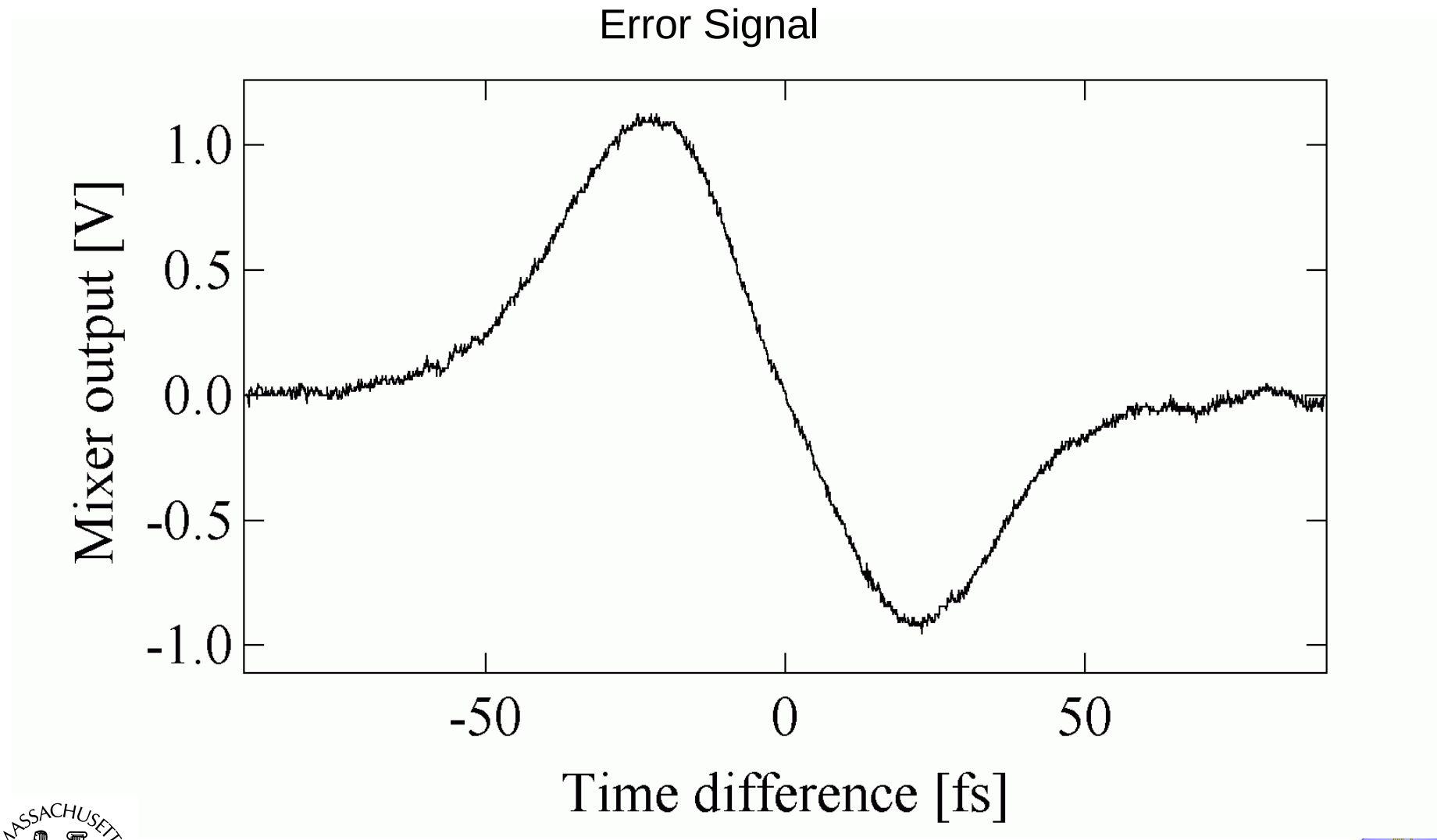

Experimental result: Residual timing-jitter

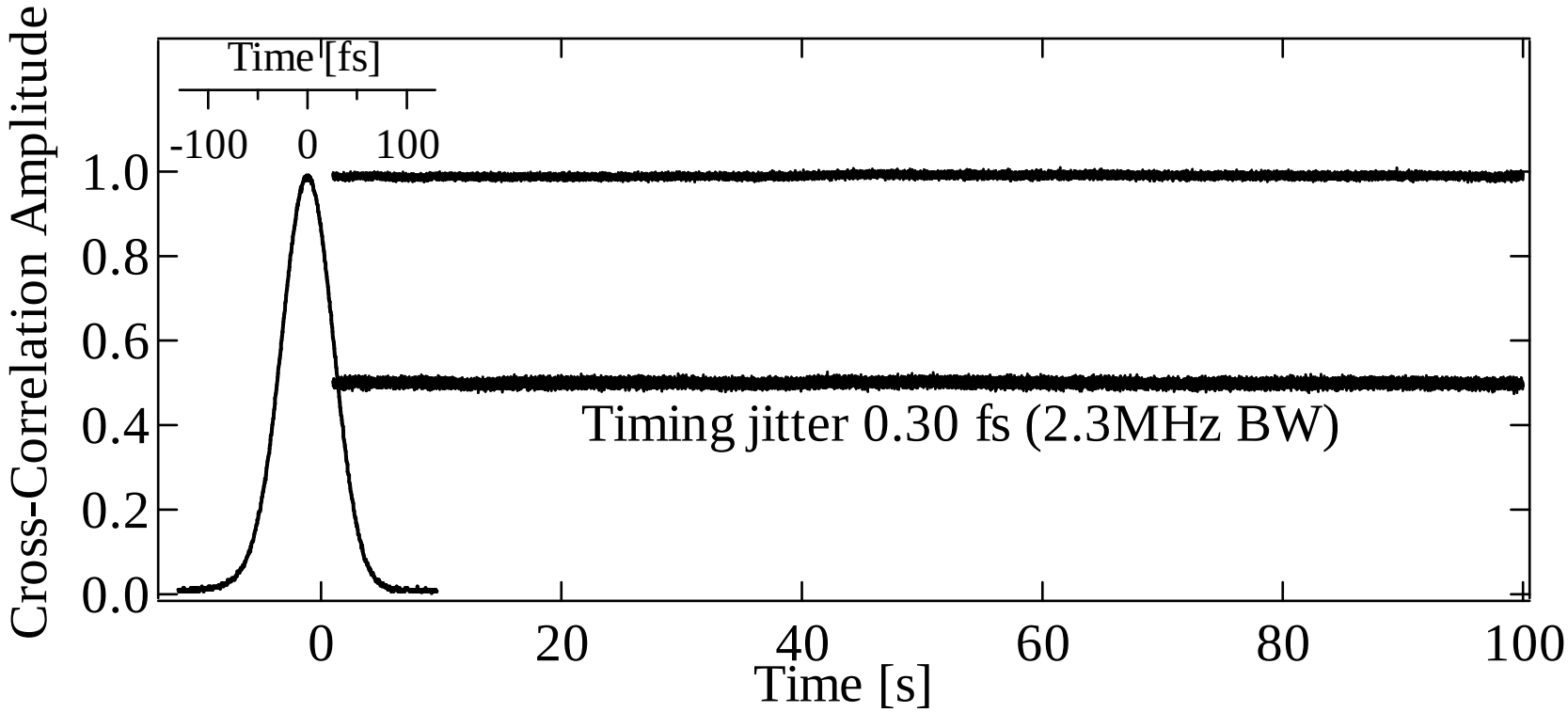

The residual out-of-loop timing-jitter measured from 10mHz to 2.3 MHz is 0.3 fs (a tenth of an optical cycle)

RF System Response

Gradient modulator drive signals **with** and **without** energy recovery in response to 250 μsec beam pulse entering the RF cavity

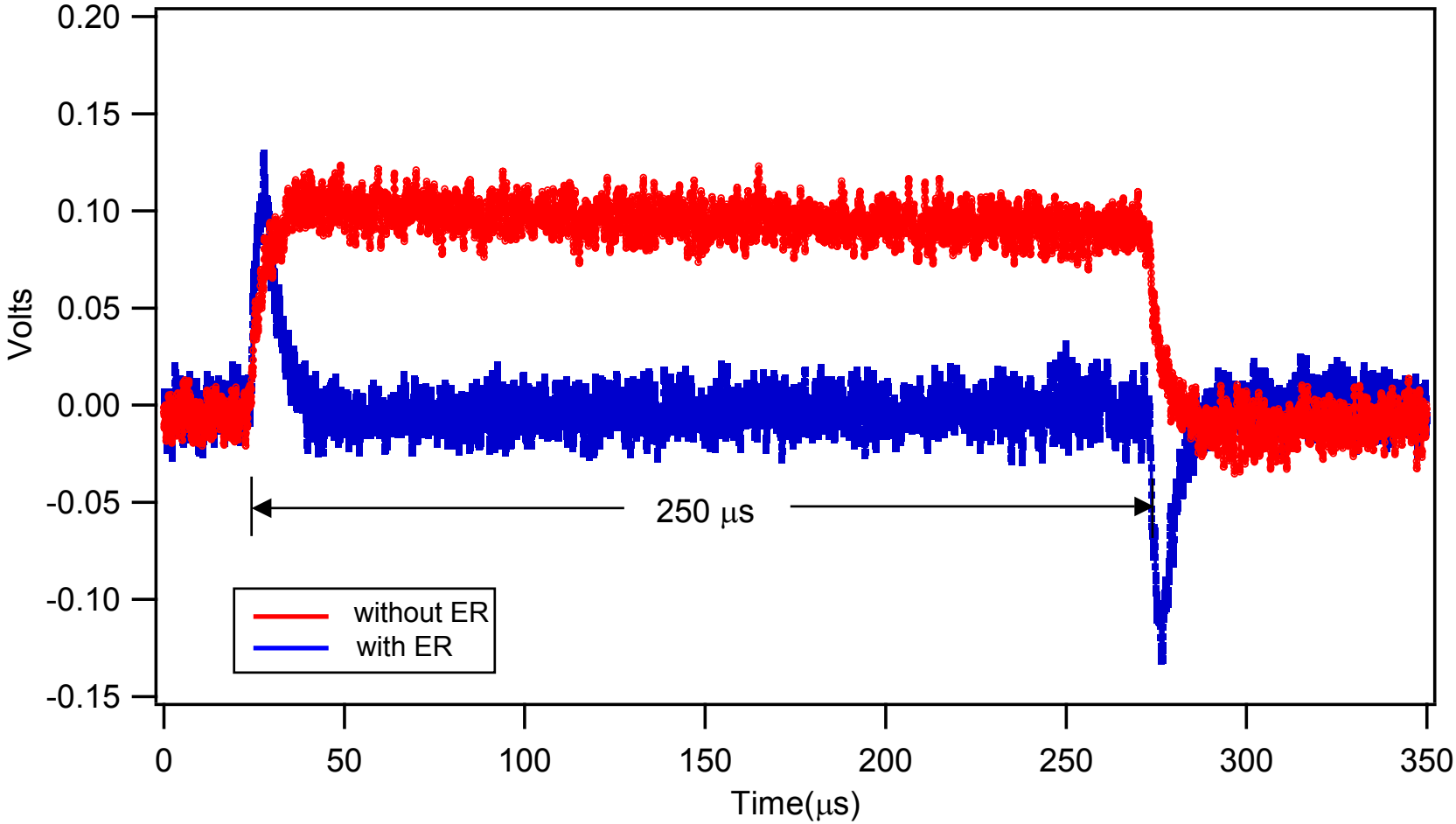

RF Instabilities

- Instabilities can arise from fluctuations of cavity fields.
- Two effects may trigger unstable behavior:
  - Beam loss which may originate from energy offset which shifts the beam centroid and leads to scraping on apertures.
  - Phase shift which may originate from energy offset coupled to M_{56} in the arc
- Instabilities predicted and observed at LANL, a potential limitation on high power recirculating, energy recovering linacs.

M_{56} is the momentum compaction factor and is defined by:

$$\Delta l = M_{56} \frac{\Delta E}{E}$$

RF STABILITY FLOW CHART

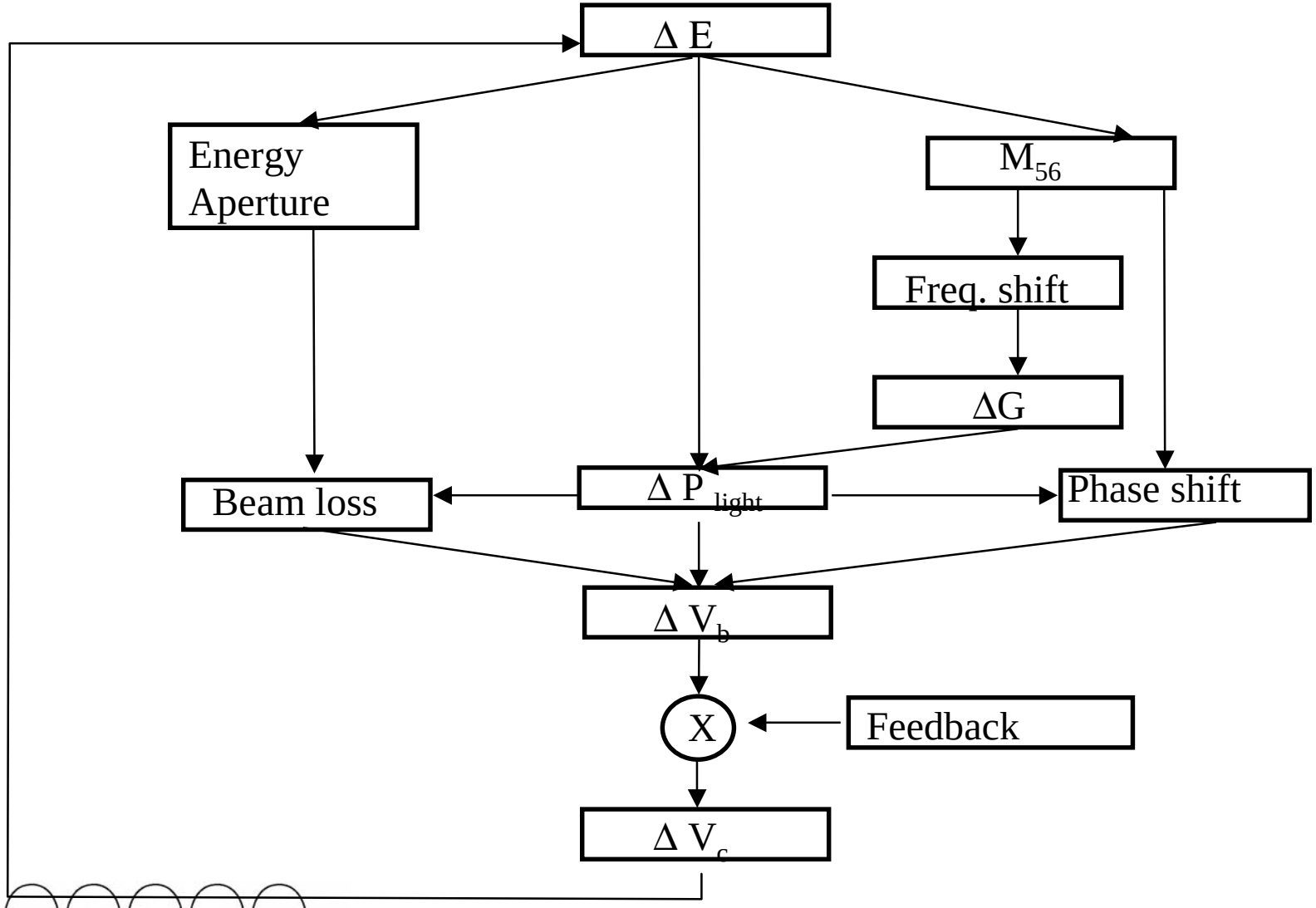

JAERI Energy-Recovery Linac for 10kW FEL (2002-)

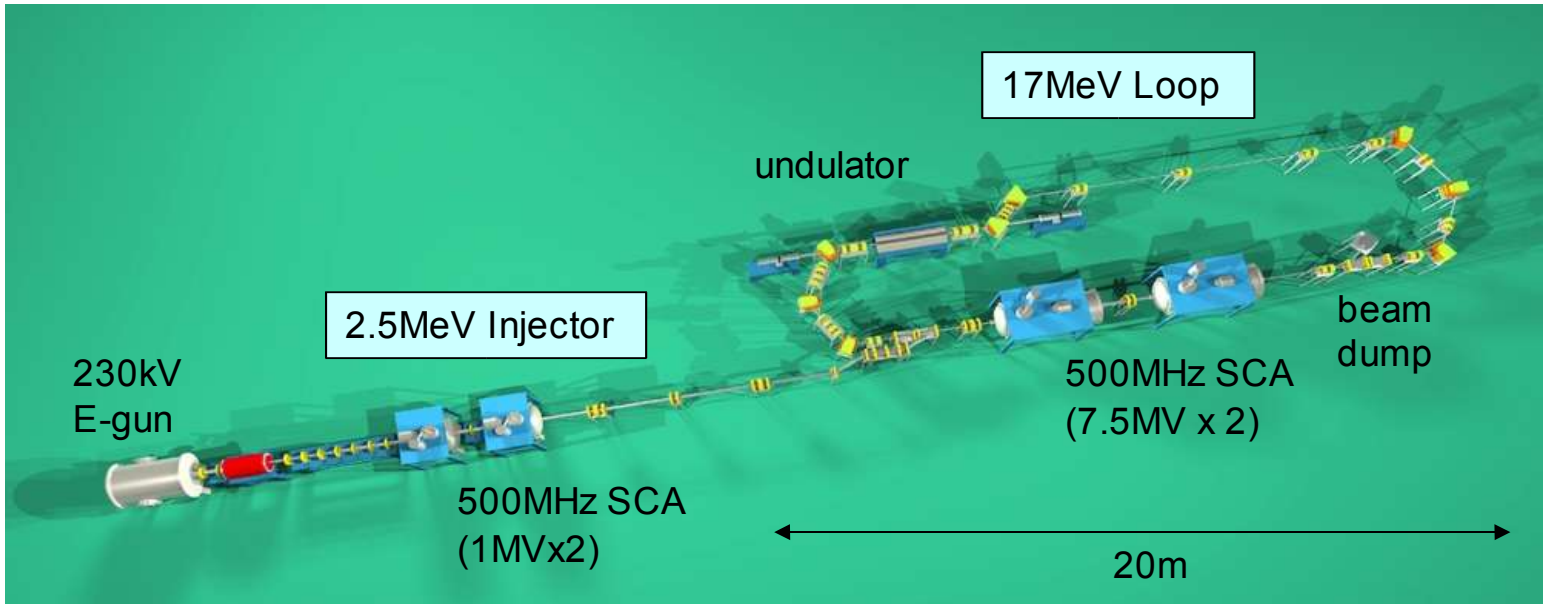

- Natural extension of the original configuration.
- 8 times larger e-beam power.
- Fitting to the concrete boundary.

Energy = 17MeV

FEL : λ = ~22μm

Bunch charge =500pC

Bunch length = ~15ps (FWHM)

Bunch rep. = 10.4MHz – 83.3MHz

Average current = 5.2mA – 40mA

after injector-upgrade

Demonstration of Energy Recovery

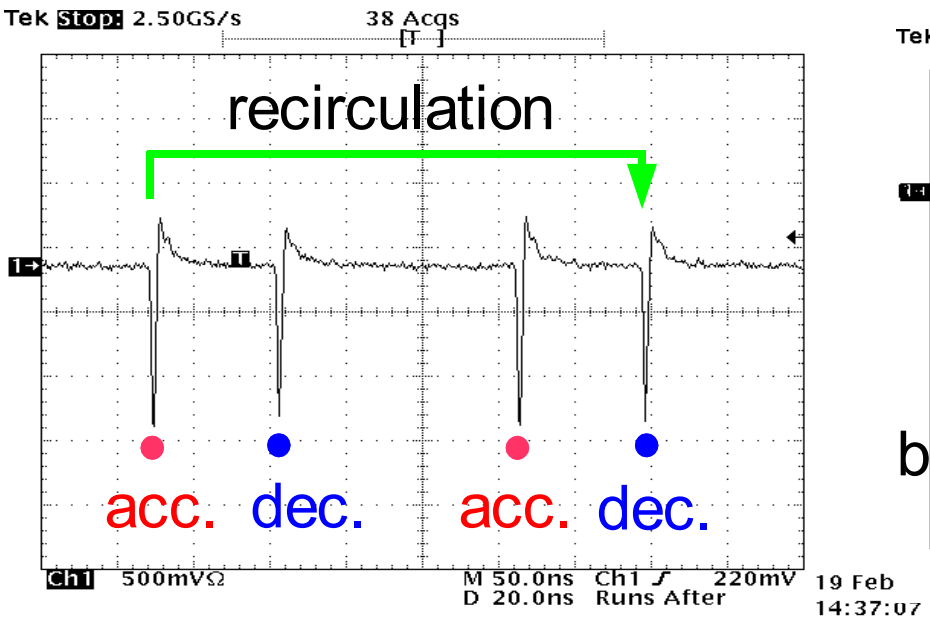

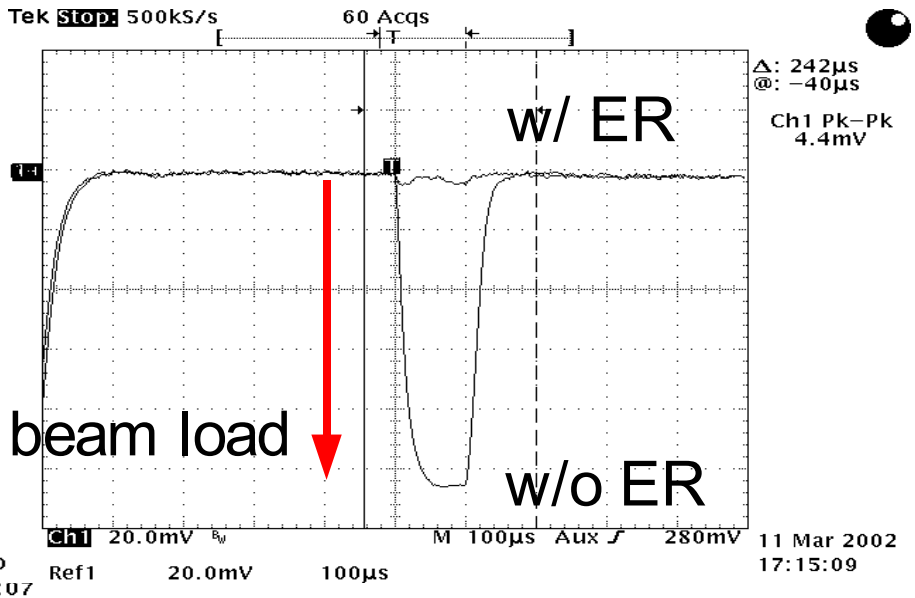

Beam current at the exit of the second main module.

Bunch interval is 96ns, and recirculation time is 133ns.

RF amp forward power for the 1st main module.

98% energy of e-beam is recovered.

Improvement of RF Stability – new low-level controllers and reference-signal cables

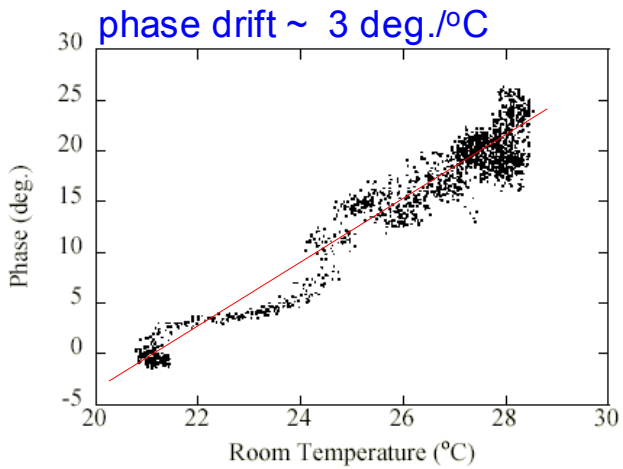

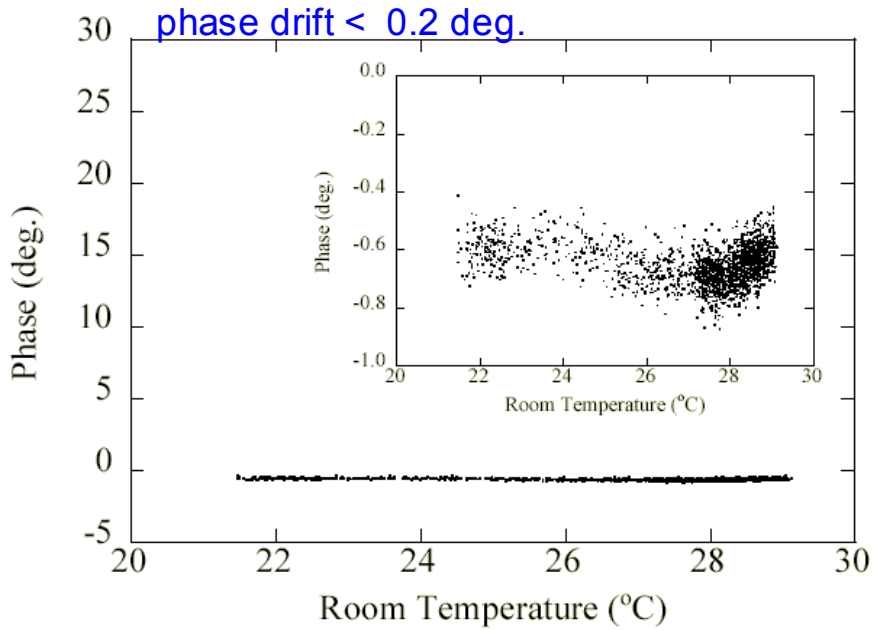

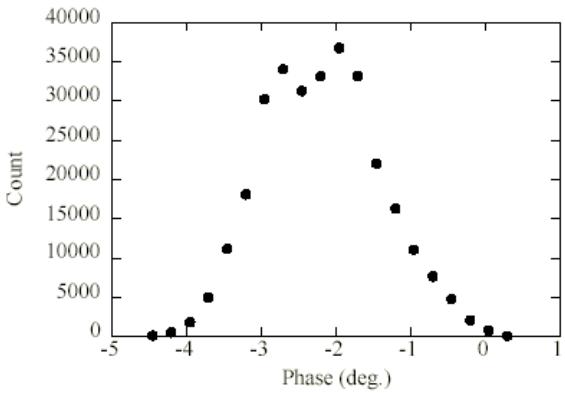

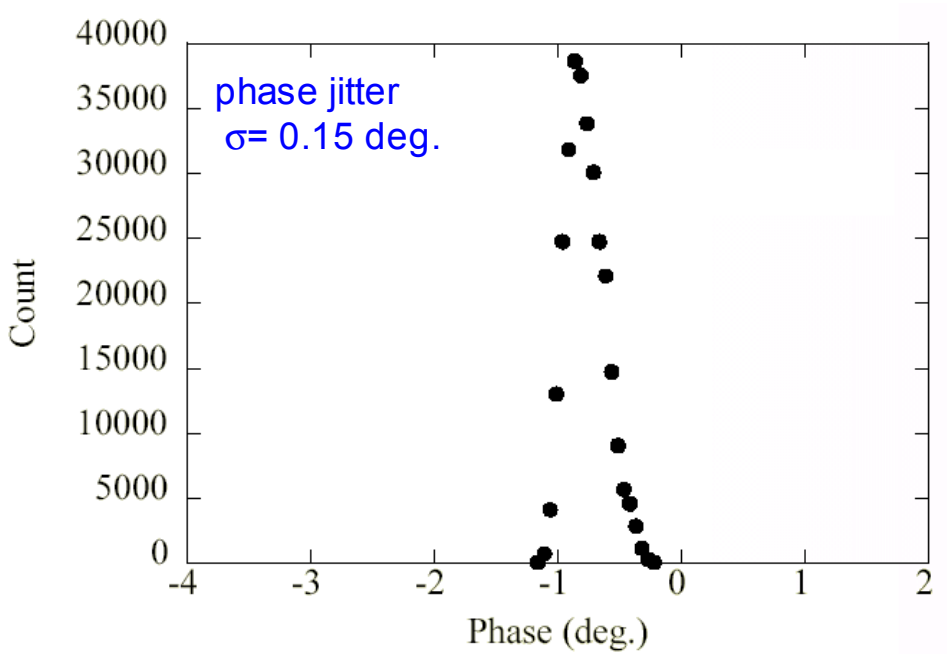

LOLA Bunch Length Measurement

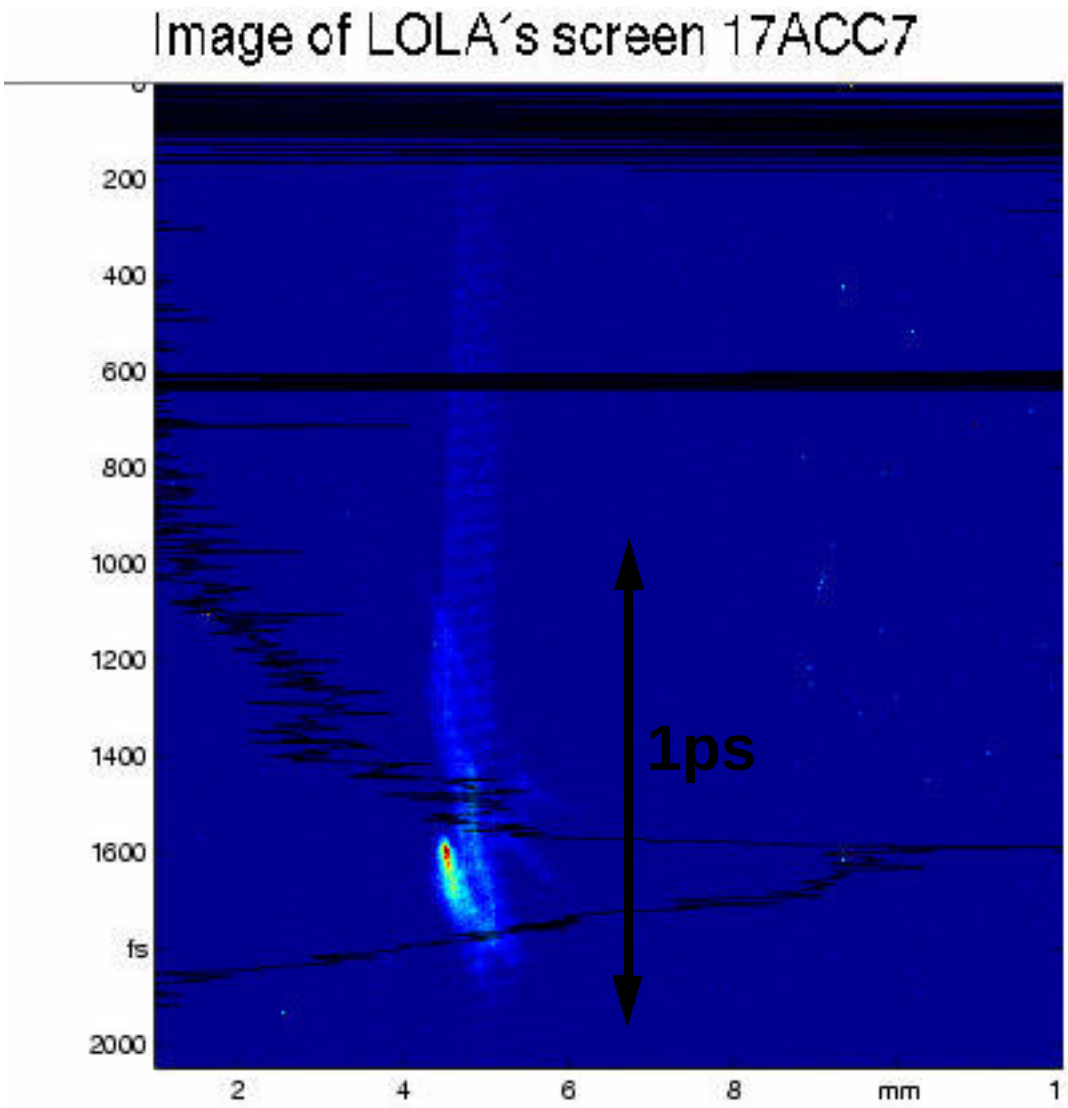

Energy	MeV	445.00
Tcr. 5DC0	nC	0.99
Gun	MV	0.20
	deg	14.00
ACC1	MV/m	15.14
	deg	121.22
ACC2/C	MV/m	10.00
	deg	00.01
ACC4/5	MV/m	5.20
	deg	-120.00
DipoleDC2	A	31.60
DipoleDC0	A	06.60
G9ACC6	A	15.50
G1CAC06	A	-16.50
G9ACC7	A	0.40
H1CAC06	A	-0.11
V1CAC06	A	0.05
H1CAC07	A	-0.15
V1CAC07	A	-0.02
BPM2ACC7x	mm	0.20
BPM3ACC7x	mm	0.70
BPM16ACC7x	mm	0.01
BPM2ACC7y	mm	1.00
BPM3ACC7y	mm	1.46
BPM16ACC7y	mm	0.54
CamerasGain		100.00
Kicker	kV	1.77
Kickerdly	ns	0.12
RFstartdly	ns	0.12
RFstopdly	ns	0.12
RF	MV	5.42
	deg	02.60

Bunch Profile and Time Jitter

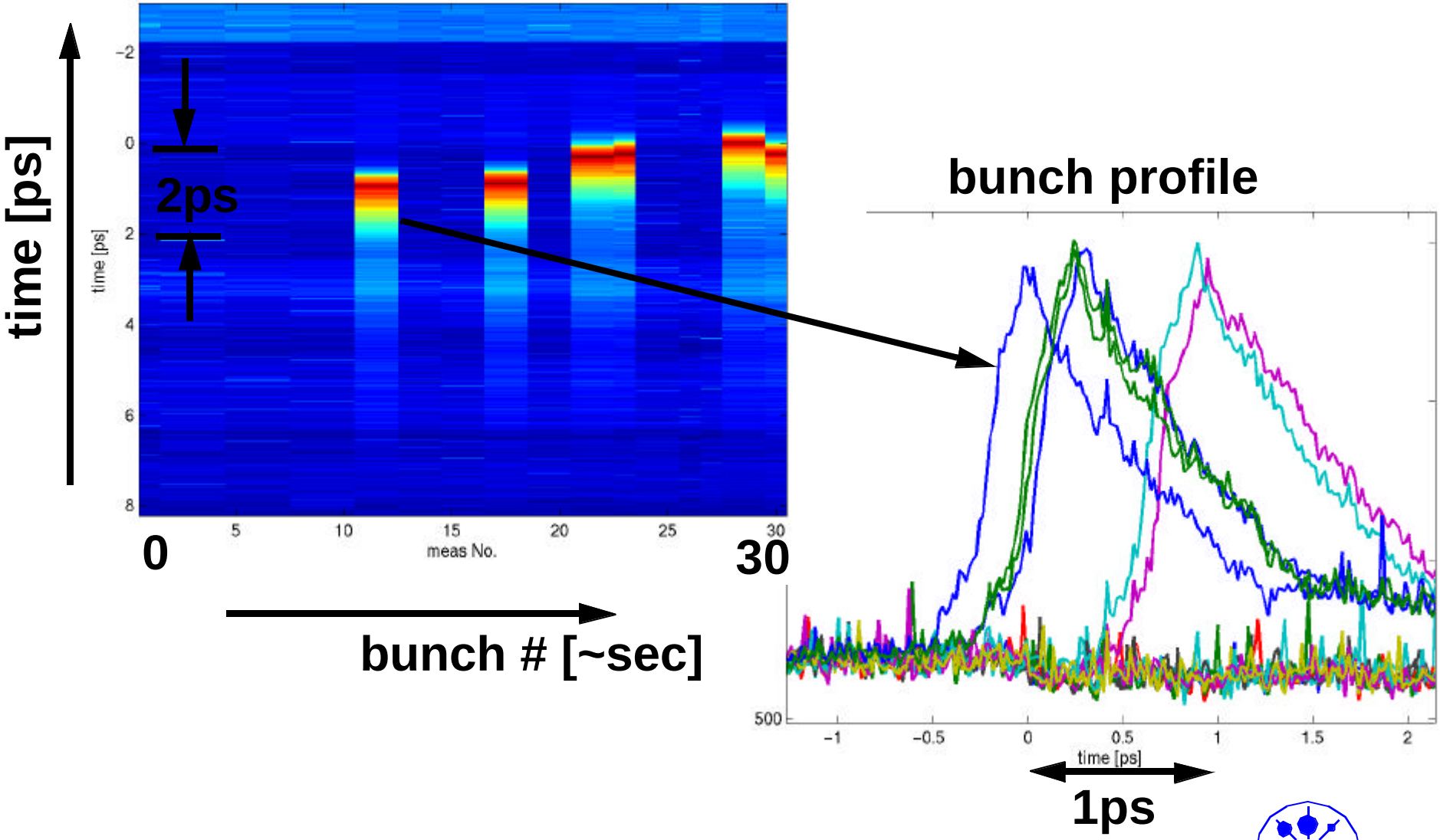

Drift ACC1 (cryomodule before BC) at TTF

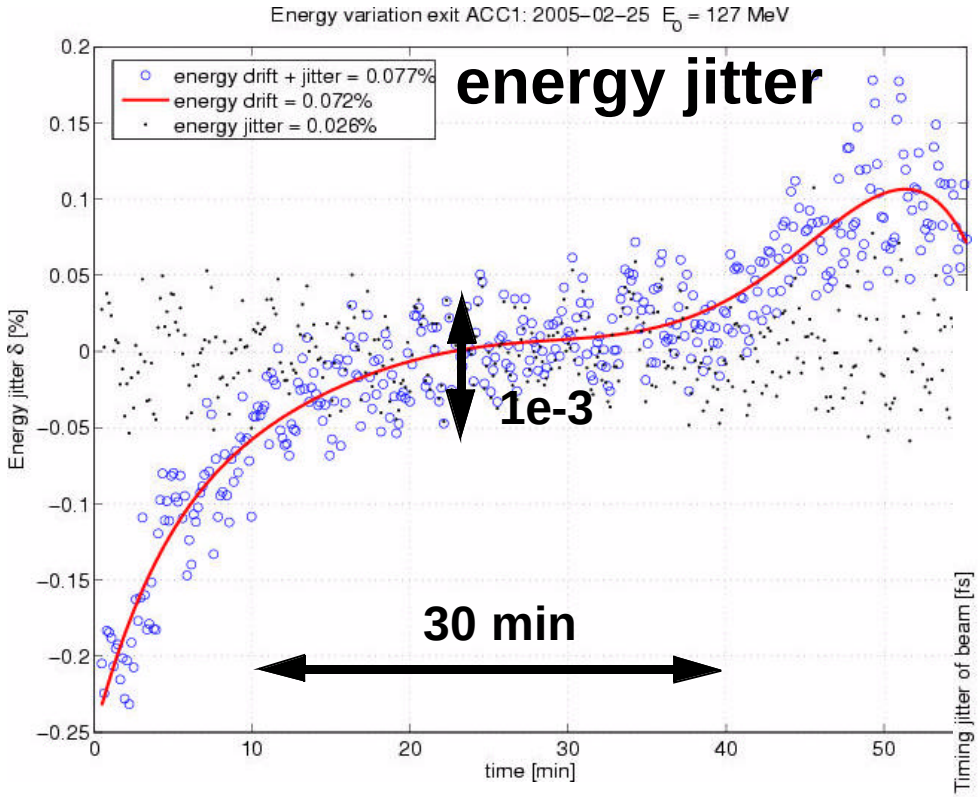

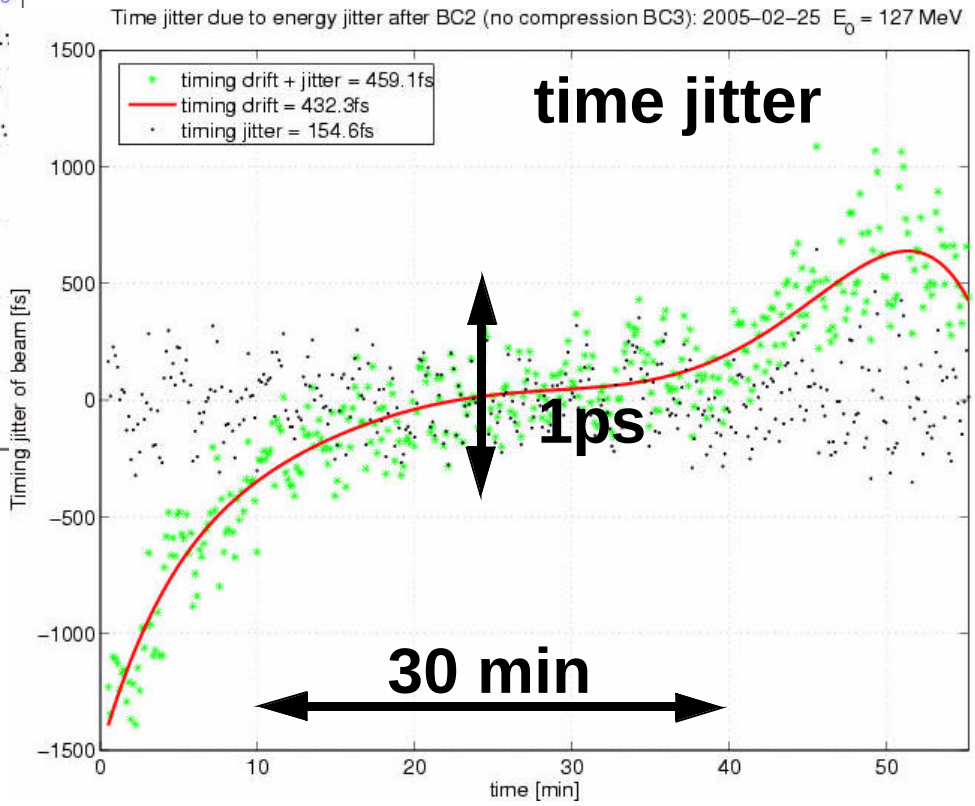

Work to be done

- Develop error budget for synchronization and rf field stability.
- Precise control of the accelerating fields in presence
  - heavy beam loading in the injector
  - high loaded Q in the linac (low beam current but strong fluctuations possible)
- Synchronize Lasers and RF Systems at various frequencies separated by distances of up to a few hundred meters.
  - Develop highly stable phase reference systems
  - Develop beam based correction schemes.
  - Develop synchronization between lasers and rf systems and demonstrate performance in the accelerator environment.