HyCal Transporter Instrumentation

Krister Bruhwel

July 2004

Abstract

The purpose of this paper is to describe the theory and operation of the Hall B HyCal transporter control system. Although the system will be controlled via EPICS software, this document will only cover the electronic hardware used to control and interlock the system. There is a distinction made between Software (EPICS) and hardware (electronic) control of the transporter. All hardware interlocks will supersede any software limits that may be implemented. A basic overview of all components involved, theory of operation, and a detailed breakdown of each item that a technician may use to repair or modify the system is provided in this document.

1 Theory of Operation

The system is composed of two stepper motors that move a large transporter in the X and Y axis (See fig. 1). Each axis has hardware switches that limit its path of motion. In addition to end limit switches at the edges of axis travel, there are home switches in mid travel that will facilitate easy positioning during an experiment. To determine the exact location of the transporter, digital and analog encoders are used to transmit its position. The transporter is controlled by our standard EPICS software interface, and there are hardware interlocks installed to prevent unwanted movement of the transporter.

The transporter operates in two modes: normal mode and storage mode. The normal mode is used during an experiment when the transporter is positioned within its normal operation limits. The storage mode is used when the transporter must traverse higher in the Y axis than normal. This is used to clear the area for other experiments or work that may need to be done in the hall.

2 System Requirements

During normal operation, the system must stay within set boundaries in the beam-line area. This area will be kept clear during an experiment, minimizing the damage risk to personnel and equipment.

During transporter storage, operator alertness is essential. The transporter will traverse the height of the space-frame and an operator must ensure that the path is clear at all times.

Under any operational condition the transporter must be checked for mechanical problems that may arise. Drive train problems, movement of the transporter outside of preset limits, and unbalanced loading are all examples of events that may cause damage to personnel and equipment. Interlocks have been designed into the system to stop all transporter movement in the event of a problem. With these precautions and operator alertness, the transport will operator efficiently and safely.

3 Hardware Interlocks

There are two modes of operation, Normal Mode and Storage Mode. The main difference between the two modes is the height of the transporter in the Y axis. Above a certain height, an operator must be more alert to the movement of the transporter. A different set of hardware interlocks is used in each of the two modes.

The following hardware interlocks are used during normal mode:

1. Pitch and roll tilt sensors
2. Emergency stop buttons
3. Analog Y-axis encoder

The following hardware interlocks are used during storage mode:

1. Pitch and roll tilt sensors
2. Emergency stop buttons
3. Dead-man switch
4. X center limit switch

During normal operation, all transporter movement will stop in the event of a tilt sensor alarm, an emergency stop button is depressed, or the analog encoder goes above a predetermined Y-axis range.

During storage operation, all transporter movement will stop in the event of a tilt sensor alarm or emergency stop button is depressed. The transporter must have the dead-man switch depressed and the X-axis centered for any movement in the Y-axis.

See fig. 3 for a logic diagram.

4 Hardware Layout

The main transporter system is located on the space-frame. Its normal operating range during an experiment is limited to travel around the beam-line area, and when stowed it is positioned much higher in Y and limited to a centered position on the X axis.

The control system is located on level two, North-East side of the space-frame. A rack contains the VME crate and the Motor Driver chassis. All hardware interlocks are housed

in the Motor Driver chassis. When an interlock has been generated, power to the axis X and/or Y motor is removed via an All Windings Off (AWO) selection at the driver. This prevents motor movement at the end of the control chain. Hardware interlocks supersede any other control logic used. Please see fig. 1 for the hardware layout.

Listed below are the major hardware components of the system:

- Stepper for motors X and Y motion.
- Dual upper and lower limit switches per axis.
- Home limit switches, X and Y axis.
- Emergency stop buttons.
- Dead-man switch.
- X center limit switch.
- tilt sensor box.
- Analog encoder for position monitoring and interlocking of the Y axis.
- Two digital encoder for positioning on Y axis and one on the X axis.
- Motor Driver Chassis.
- VME crate with IOC.
- VME Motor Driver control board.
- VME Motor Driver ADC board.

5 System Components

A schematic diagram of the connections among the following system components is shown in fig 2.

5.1 VME Crate

The VME crate is located on level 2 of the space frame NE side. It contains the Input Output Controller, Motor Driver Board, and the Analog Input Module.

5.1.1 MVME 2306 IOC Board

The IOC controls the entire crate and serves variable to EPICS so that a software interface may be used to control the transporter. Refer to reference [1] for more information.

5.1.2 OMS VS-040 Motor Driver Board

This board receives command from the IOC and transmits motor movements to the Motor Driver Chassis. As well, it receives inputs from the digital encoders via the Motor Driver Chassis for use by EPICS. Refer to reference [2] for more information.

5.1.3 XVME-560 Analog Input Module

The XVME-560 board is used to convert signals from the analog encoder and the tilt switches into a format usable to EPICS. This is for EPICS use only. In addition, both the analog encoder and the tilt switches are hardwired to the interlock system. Refer to reference [3] for more information.

5.2 Motor Driver Chassis

The Motor Driver Chassis houses two motor driver modules for the X and Y axises, a VME break-out board, and a hardware interlock board. All system hardware interlocking is implemented through this chassis. All hardware interlocks override any software interlocks that may be in place. A triggered interlock will remove power from its associated motor by using the All Windings OFF (AWO) selection at the driver module. Please see: fig 2, fig 3, fig 4, and fig. 5.

5.2.1 Interlock Board

The Interlock Board in the Motor Driver chassis is the heart of the interlock system. This board controls two relays that supply power to the X and Y axis motor driver modules. If the interlocks are not made, no power will be available to drive a motor in a any direction. The board has bypass switches and indicating lights so that it may be easily modified by a technician to meet non-standard system interlock requirements. Please see: fig. 5.

5.3 Stop Buttons

Four stop buttons are provided that will prevent movement of the transporter in the X and Y axis. The switches must be pulled back out to reset the interlock. There is one switch per level of the space frame and one in the Hall B Counting House. The stop switches enable a constant high voltage level to the Interlock Board. If it is removed, power to the X and Y drives will be disabled. If the cabling for the stop switches is unplugged, the interlock will automatically disable the drives.

5.4 Dead-Man Switch

The dead-man switch is used to insure an operators physical presence when moving the transporter in the Storage Mode. It is a momentary on push button that must be depressed to meet the interlock requirements of the Motor Driver Chassis.

5.5 Tilt Switches

The Tilt Switches sense pitch and role of the transporter. There is a sensor box on the transporter and a control module in the control rack on the second level of the space frame. The control module provides input to EPICS and interlock inputs to the Motor Driver chassis that must be made to meet interlock requirements for system operation. It is wired in a similar fashion as the Stop Switches in that an unplugged cable will prevent motor driver operation. Refer to reference [4] for more information on it hardware.

6 Summary

While the operators of the transporter must be trained in its use, there are important measures designed into the system to prevent damage to personnel and the system. The hardware interlocks supersede any software interlocks that may be put into place, and will ensure the system is in a safe state in the event of an error or malfunction.

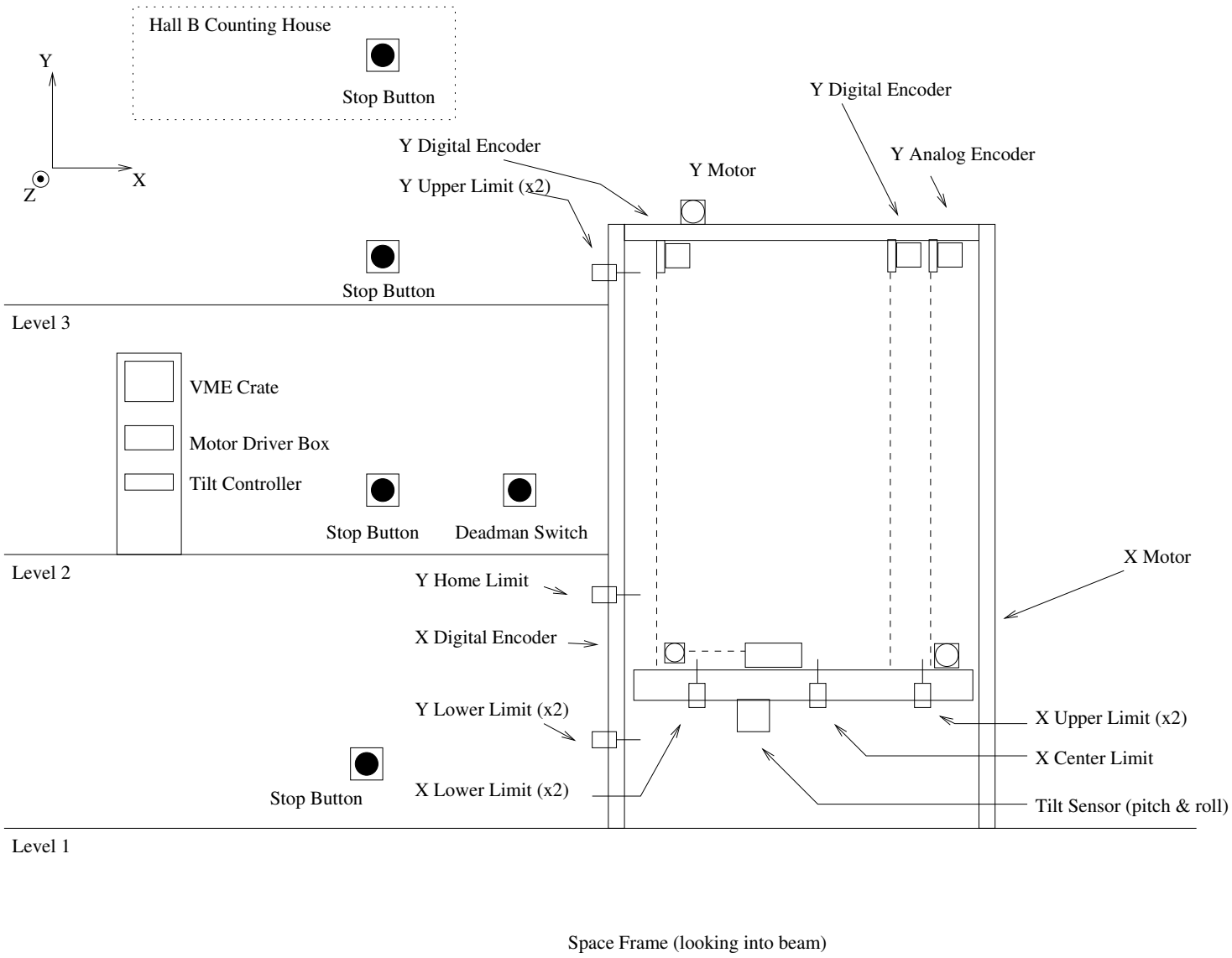

Figure 1: Hardware Overview

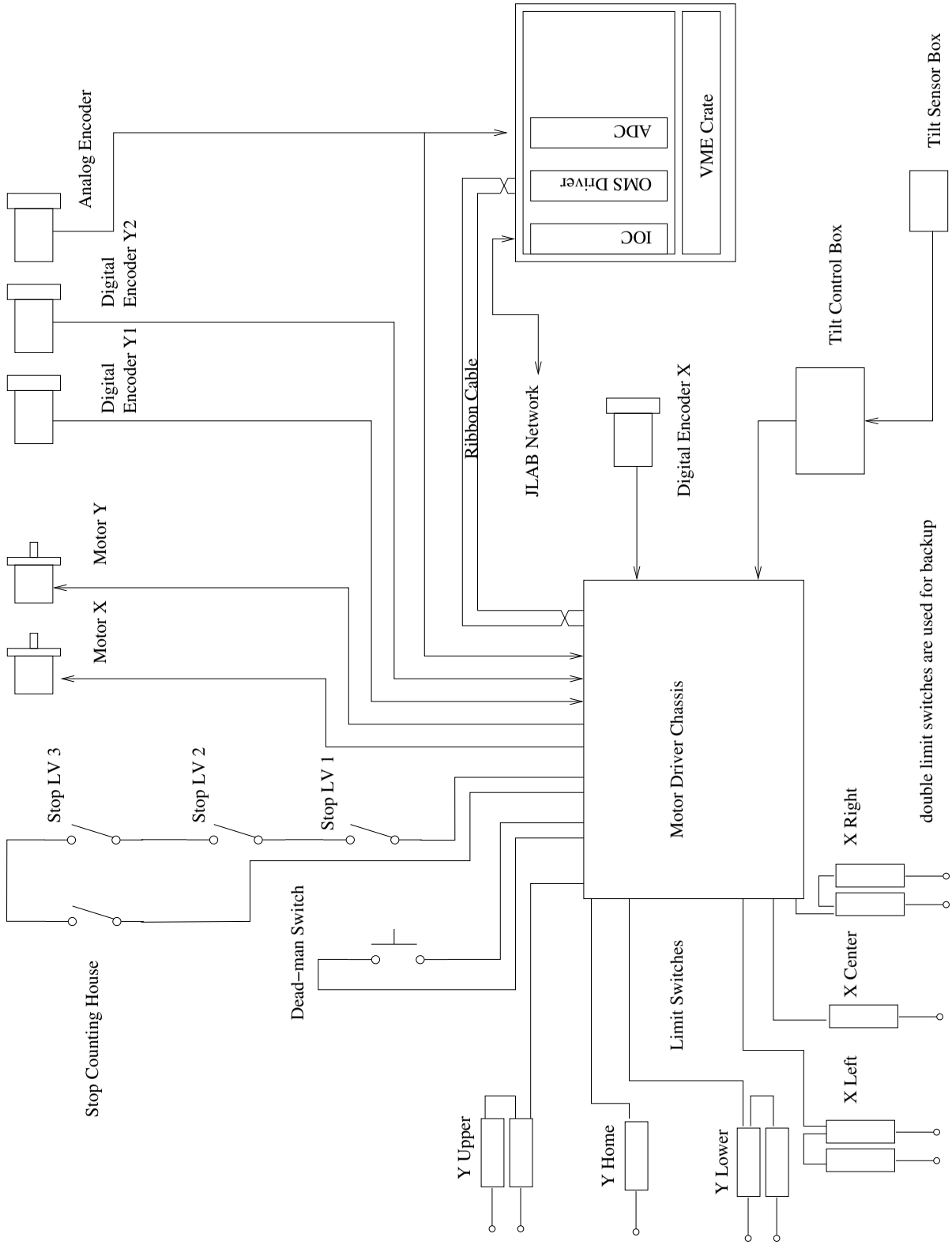

Figure 2: Motor Driver Chassis Connections

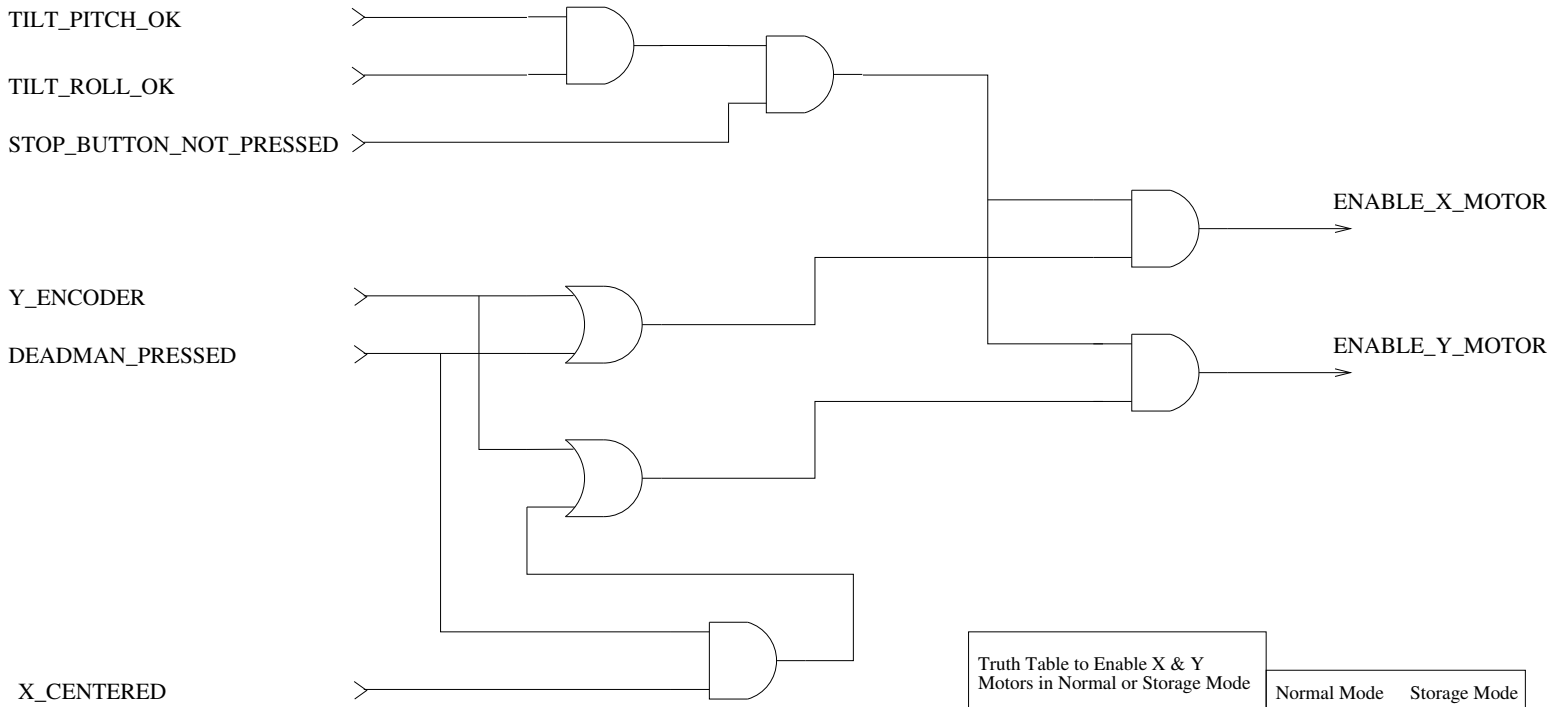

Truth Table to Enable X & Y Motors in Normal or Storage Mode	Normal Mode	Storage Mode
TILT_PITCH_OK	TRUE	TRUE
TILT_ROLL_OK	TRUE	TRUE
STOP_BUTTON_NOT_PRESSED	TRUE	TRUE
Y_ENCODER	TRUE	FALSE
DEADMAN_PRESSED	FALSE	TRUE
X_CENTERED	FALSE	TRUE

Figure 3: Interlock Logic

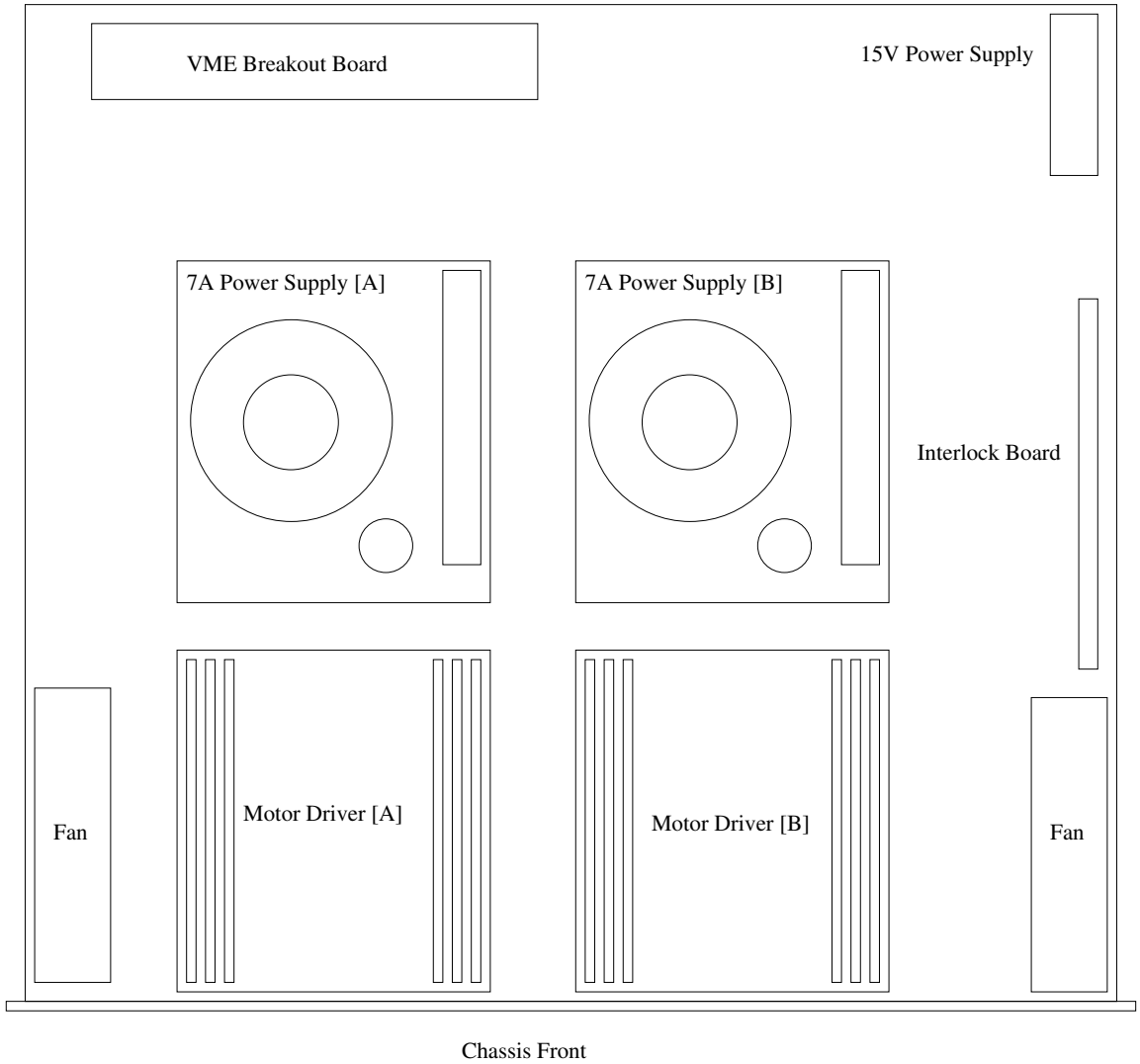

Figure 4: Motor Driver Chassis

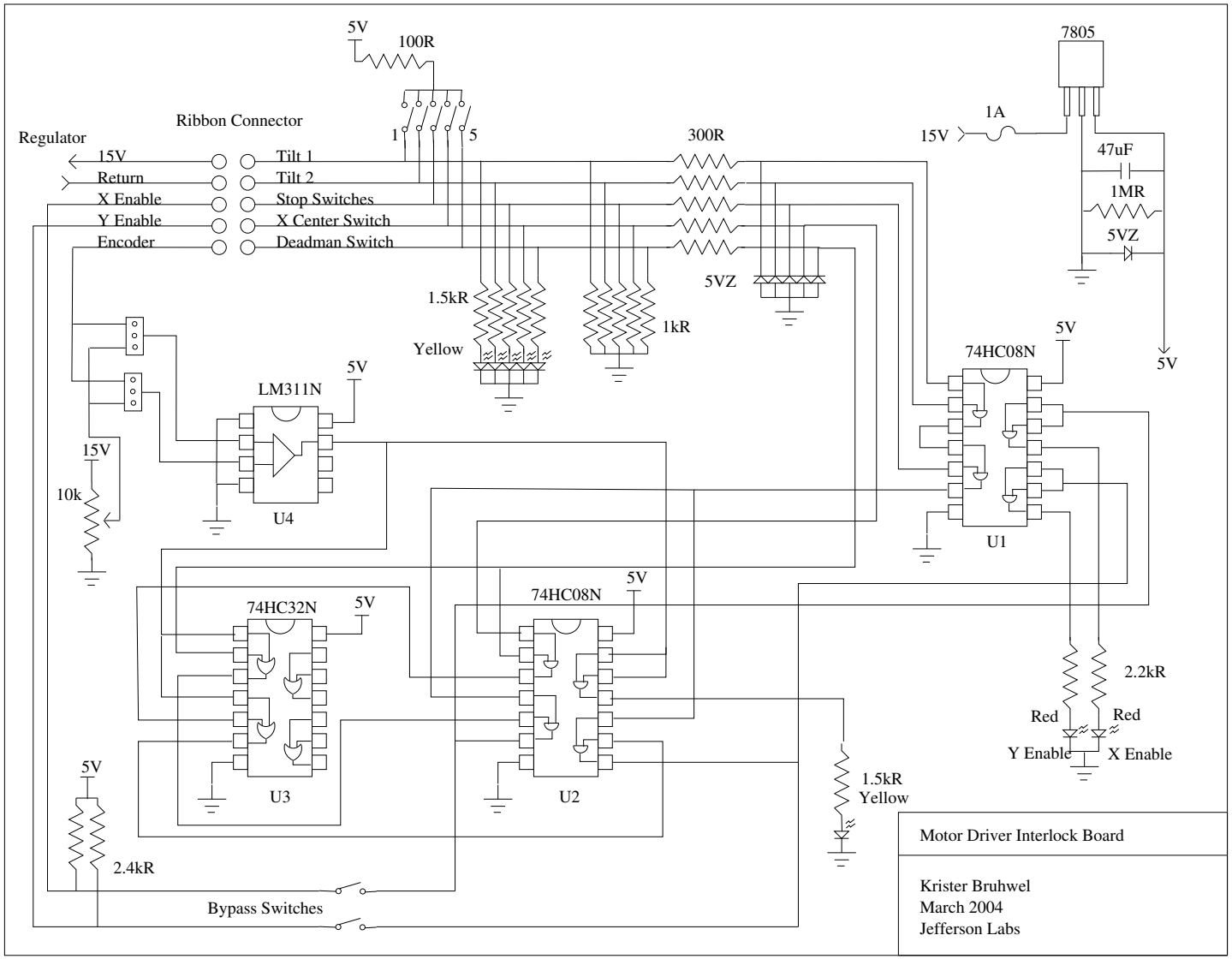

Figure 5: Motor Driver Interlock Board

References

[1] Motorola Inc, *MVME162 Embedded Controller User's Manual*

[2] Oregon Micro Systems Inc, *OMS Intelligent Motor Controllers User's Manual*

[3] XYCOM Inc, *XVME-560 Analog Input Module*

[4] Rieker Electronics Inc, *RDDR16-4-a Manual*, http://www.riekerinc.com/DigitalInclinometers.htm