RICH-II Update – March 10, 2021 Meeting

Tyler Lemon
Detector Support Group
March 12, 2021

Contents

- Interlocks
  - Hardware
  - SHT35 sensor PCB
  - Software
- PMTs
- Electronics
- Cooling system
- Detector shell
- Aerogel
- Planar mirrors
- Spherical mirrors
- Location in Hall B

Interlocks

- Showed slides on hardware, SHT35 sensor PCB, and software
  - Next three slides
- Gave timeline that with no time contingency, system would be ready in June 2021
- System needed when front-end electronics (FEU) are installed en masse
  - FEU assembly expected to start June 2021
  - FEUs are made up of:
    - Hammamatsu MAPMTs
    - MAPMT adapter board
    - Multi-anode Readout Chip (MAROC) board
    - FPGA board

Hardware Interlock System - Hardware

- All Sensirion SHT35 sensors procured
  - Both temperature and humidity measurements from one digital sensor
  - Read using I^2C communication
- Prototyping of I^2C pull-up resistors and buffer drivers underway
  - Procurement of remaining components will happen after prototyping is complete
- Design of PCBs for reading out sensors underway
  - SHT35 Sensor PCB
  - I^2C bus sbRIO adapter RMC
  - Chassis backplane PCB for power and communication distribution

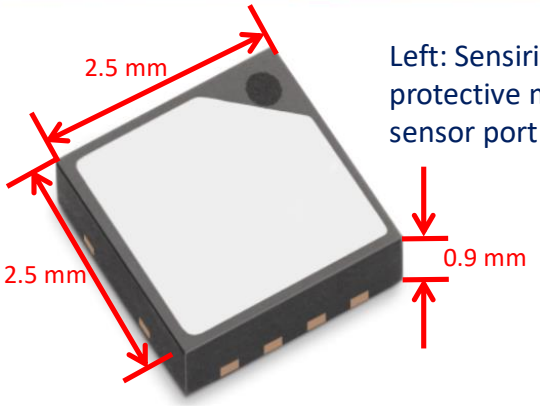

Left: Sensirion SHT35 with protective membrane over sensor port

	Parameter	Specification
Humidity	Accuracy	±1.5% RH
	Long-term drift	<0.25% RH/year
	Operating range	0–100% RH
	Resolution	0.01% RH
	Repeatability	0.08% RH
Temperature	Accuracy	±0.1°C
	Long-term drift	< 0.03 °C/year
	Operating range	–40 to 125 °C[1]
	Resolution	0.01°C
	Repeatability	0.04 °C
Communication interface		I^2C
Supply voltage range		2.15–5.5 V
Measurement duration		12.5 ms
Average current consumption		1.7 µA
Package size		2.5 x 2.5 x 0.9 mm²

Honeywell humidity sensors previously had ± 3.5% RH accuracy

Omega RTDs previously used had ±0.15° C accuracy

Table with SHT35 specifications in DSG Note 2020-28 by Peter Bonneau

SHT35 Sensor PCB

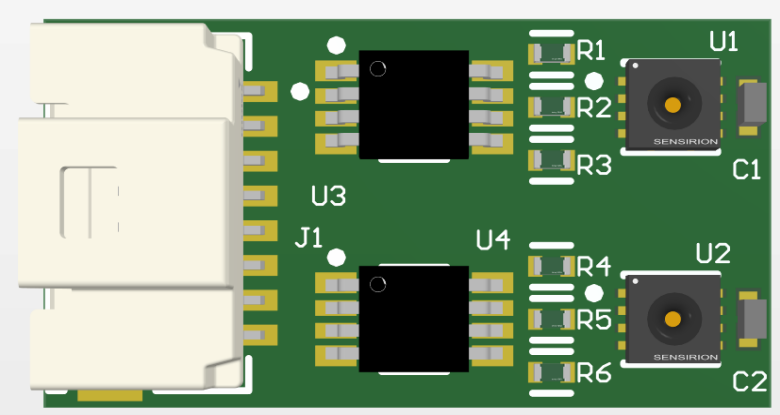

Altium rendering of first version of PCB layout designed by Marc McMullen. PCB dimensions are ~11 mm x ~25 mm

J1 – Latching connector
U1, U2 –SHT35 sensors
U3, U4 – PCA9600 buffer drivers
R1, R3, R4, R6 –Pull-up resistors for I^2C (values TBD)
R2, R5 –Resistors to limit current on line holding sensors' reset pins high
C1, C2 – power decoupling capacitors

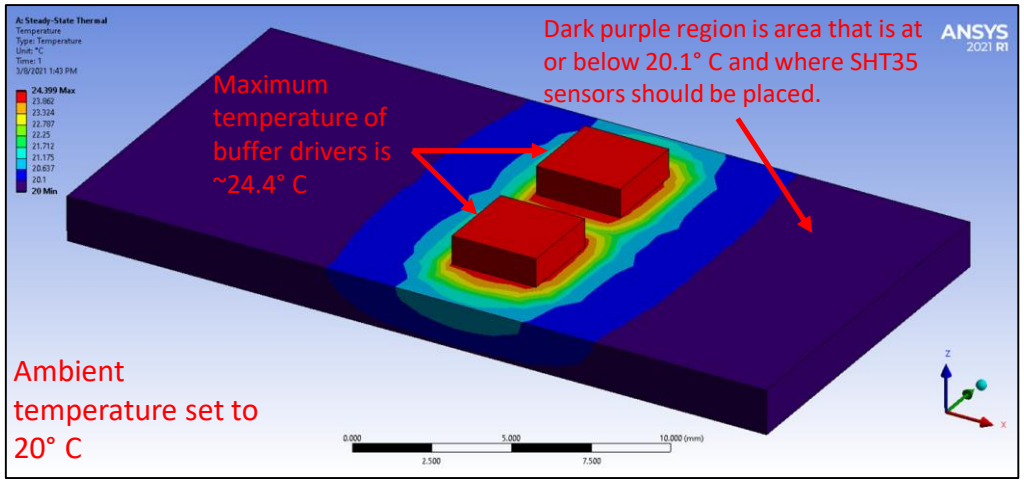

Results of simplified SHT35 Sensor PCB's ANSYS temperature analysis. Buffer drivers dissipate ~22 mW when holding signals low. SHT35 sensors placed in dark purple region of PCB will not be effected by buffer drivers' heat dissipation.

- Design in progress
- PCB holds all components needed to read out two Sensirion SHT35 digital temperature and humidity sensors
  - PCB is still ~40% smaller than one presently used for analog sensors
- A simplified PCB modeled in ANSYS to ensure heat generated by buffer drivers does not effect temperature and humidity readings.
  - More detailed analysis on-going

Hardware Interlock System - Software

- SHT35 sensors read by NI sbRIO-9627
- Base program for reading 24 SHT35 sensor PCBs complete
  - 24 SHT35 PCBs = 48 total sensors = maximum able to be read by sbRIO
    - In previous sector: 16 humidity/temperature boards = 32 total humidity/temperature readouts
  - After hardware prototyping, I^2C timing will be finalized
- Further additions in progress
  - Addition of interlock logic
  - EPICS interface
    - sbRIO client
    - User interfaces
  - Interlock limit backup and restore
  - Gas system monitoring

Hamamatsu PMTs

- 400 total to be delivered for RICH-II
  - 391 needed for detector
    - leftover nine + RICH-I leftovers for spares
- 321 delivered to JLab
  - All tested; one rejected and sent back
- 53 ready to be sent from INFN to JLab
- 26 to be ordered by INFN

Electronics

- Fast Electronics Group has ordered all MAROC boards and fiber-optic transceivers
- All HV connectors received
- Low voltage distribution panel complete

Cooling System

- Duplicate air distribution tank/panel will be needed for EEL and Hall B
  - Components needed in yellow-highlighted block in schematic below
- Old compressor will be moved to EEL for assembly tests

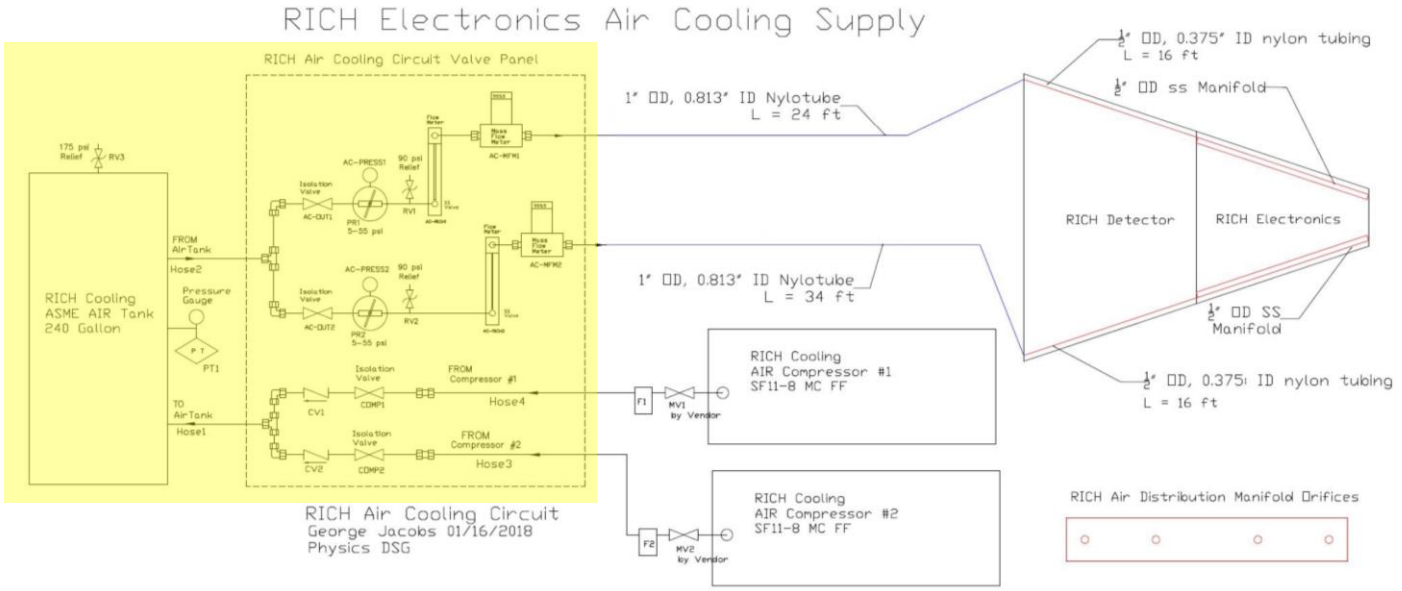

Detector Shell

- In hands of courier
- Two crates
  - Box 1: ~14 ft x ~7.5 ft x ~3.5 ft; ~2200 lbs
    - Aluminum and carbon fiber panels
  - Box 2: ~5 ft x ~4 ft x ~2 ft; ~660 lbs
    - Sides of detector
- Expected delivery late April 2021

Aerogel

- New dry cabinet has left factory
  - Expected deliver March 27, 2021
- Aerogel will be held until dry cabinet received
  - Customs paperwork to be started ahead of time to expedite process once dry cabinet is received
- All tiles expected to be delivered in June 2021

Planar Mirrors

- Ready for shipment from INFN
  - Expected to be delivered in June 2021
- Spare front mirror being fabricated
  - “Most critical” planar mirror that has aerogel sitting in front of it

Spherical Mirrors

- Fabrication delayed due to raw material availability
- Expected to be received at JLab in October 2021
- Fabricator of mirror support to be determined
  - Ideally, CMA (spherical mirror fabricator) would also make support
    - Depends on cost
- D0 and reflectivity tests will be performed at JLab
  - Improvements to existing system would be “good but not critical”

Locations in Hall B

- Final location of RICH-II on forward carriage to be determined
  - New sector is currently referred to as “RICH-II” rather than “RICH S#” because of location uncertainty
- Run Group H discussion will determine where RICH-II will go
  - Luminosity in Sector 1 areas may be too high for RICH electronics
    - May also have to move RICH-I

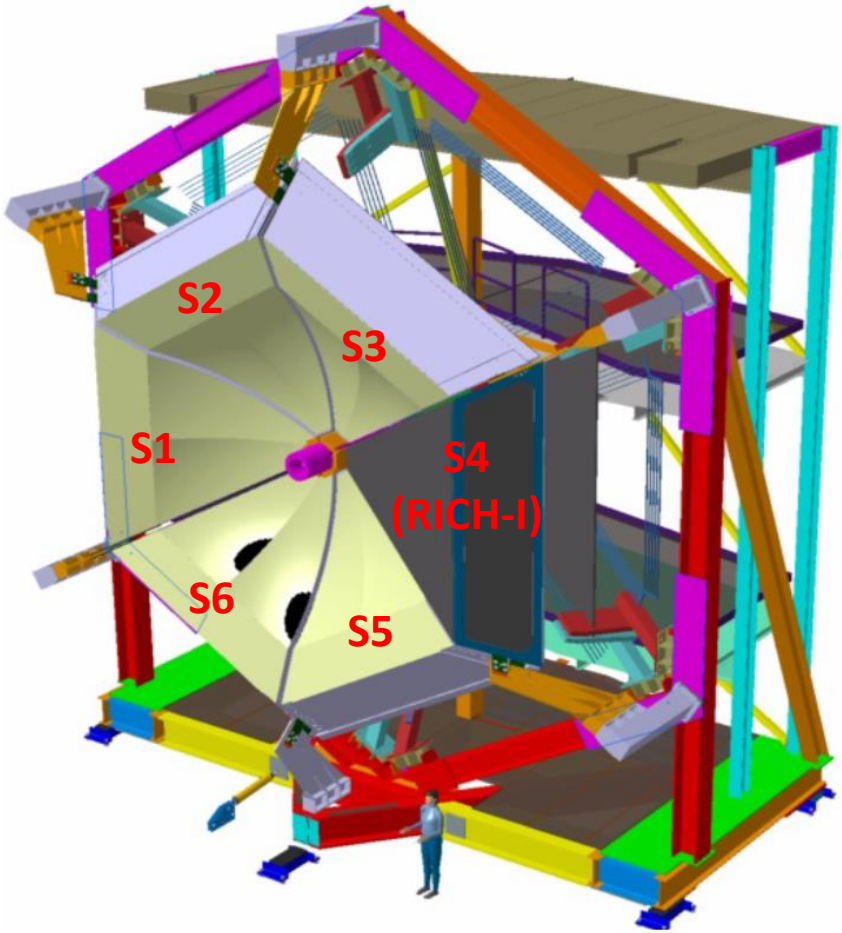

Hall B Forward Carriage showing sector numbering

Thank You