A proposal for MPGD-based transition radiation detector/tracker

F. Barbosa[1], L. Belfore[2], C. Dickover[1], S. Furletov[1], Y. Furletova[*1], K. Gnanvo[1], S. Greene[3], L. Kasper[3], N. Liyanage[4], H. Nguyen[4], L. Pentchev[1], M. Posik[5], C. Stanislav[1], B. Surrow[5], S. Tarafdar[3], J. Velkovska[†3], and B. Zihlmann[1]

[1]Jefferson Lab
[2]Old Dominion University
[3]Vanderbilt University
[4]University of Virginia
[5]Temple University

July 25, 2022

Project ID:
Project Name MPGD-based transition radiation detector and tracker
Period: from 10/1/2022 to 09/30/2023

Contact Persons: Yulia Furletova (yulia@jlab.org) and Julia Velkovska (julia.velkovska@vanderbilt.edu)

Abstract

Transition radiation detectors are widely used for electron identification in various particle physics experiments. For a high luminosity electron-ion collider a high granularity tracker combined with a transition radiation option for particle identification could provide additional electron identification/hadron suppression. Due to the low material budget and cost of MPGD detector technologies, an MPGD based transition radiation detector/tracker (MPGD-TRD/T) is an ideal candidate for a large area hadron endcap where a high flux of hadrons is expected at the EIC.

[*]yulia@jlab.org
[†]julia.velkovska@vanderbilt.edu

1 Introduction

2 Physics motivation

Electron identification plays a very important role for the physics accessible at the Electron-Ion Collider (EIC). The following processes are regarded as essential for the EIC physics program and could be accessed with the help of improved electron identification. Events with scattered electrons in the final state are important signatures for DIS physics at EIC. Secondary electrons could be emitted from leptonic and semi-leptonic decays of hadrons. The efficiency to identify electrons and also e-π background rejection defines the efficiency and purity for indentifications of such processes as J/ψ production (branching ratio to e^+e^- pair is the order of 6%), D-mesons production (with its Br($D^+ \to e + X$) $\sim$ 16%), as well as B-mesons production (lepton Br($B^\pm \to e + \nu + X_c$) $\sim$ 10%). The di-electron (or even multi-lepton) production via photon-photon interactions are important processes for testing the Standard Model.

Electron identification plays an important role for many other physics topics, such as spectroscopy, beyond the standard model physics, etc. Isolated electrons are not easy to identify at the EIC because of the relatively large QCD background from hadrons.

As an example, Fig. 1 shows that additional e/π rejection factor of 100 could help to significantly suppress the combinatorial hadronic background for resonant searches of XYZ states, e.g. Z_c. The electrons emerging from such decays are forward boosted. In addition, the presence of 4-5 orders of magnitude higher photoproduction hadronic background makes the detection of such processes much more difficult.

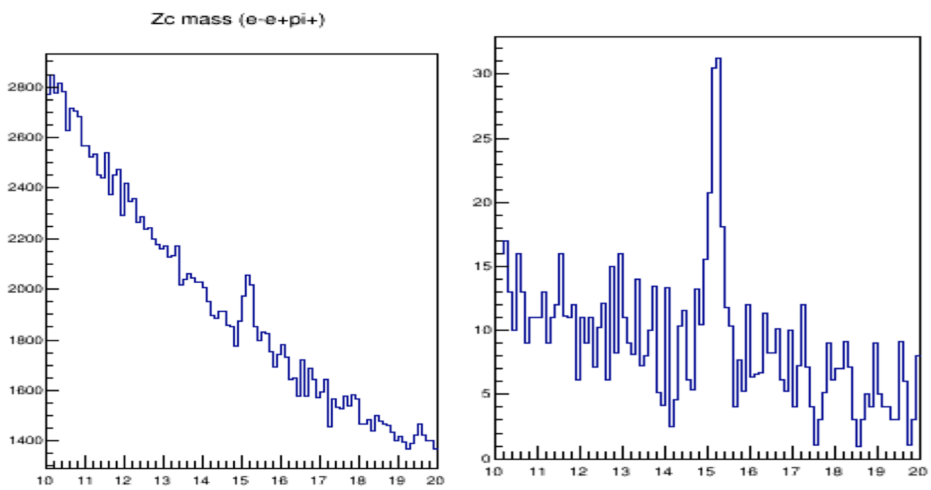

Figure 1: Mass distribution spectrum for Z_c state (m^2 (e$^+$e$^-$)) in GeV^2, using the typical EmCAL e/π rejection factor of 100 (left) and with additional rejection 100 (right) for 10GeVx100GeV ep collision at EIC.

The success of the physics program at the next generation of high-intensity collider with its high demand for precise measurements relies on the development of high granularity detectors. A high granularity tracker combined with a transition radiation option for particle identification could provide a cost-effective way for enhancing electron identification and hadron suppression in a high-multiplicity environment.

As indicated in the EIC Yellow Report [1], a Transition Radiation Detectors (TRD) could help with:

- providing additional e/π separation
- measurements of a track angular resolution and therefore help to improve RICH performance in the hadron end-cap (forward end-cap)
- correction for multiple scattering before the EMCAL and to improve tracking performance for charged particles

- improving pointing track resolution and cluster-seed position measurements for EMCAL
- could be used as a seed element for track-finding algorithms
- as an independent low-mass detector placed in front of EMCAL, can be used to estimate the calorimeter efficiency for pion rejection, and vice versa, EMCAL can be used to estimate the TRD rejection efficiency

A GEM-based TRD was included in the ATHENA detector proposal [2] as an upgrade path. Space is available in the EIC Detector-1 design to introduce an MPGD-based TRD in the hadron endcap to provide enhanced e/π separation power in the forward direction.

MPGD-based Transition Radiation Detector setup could also be considered as an alternative and complementary tracking system for the second detector at EIC.

3 Past experience

We performed an intensive R&D program for the GEM-based Transition Radiation Detector (eRD22) for EIC. Our results were presented at conferences and summarized in the publications and progress reports [3, 4]. It was shown that a single module, which consist of a GEM module with 3 cm drift gap and 15 cm TR-radiator as shown in Figs. 2, 3 , could provide a e/π rejection factor of 9 with 90% electron efficiency as shown in Fig. 4 (left).

A standard triple-GEM detector with high granularity strip pitch (400 μm) is capable of providing high resolution space point position information. In addition, such a detector could provide a high-precision track segment, which might be useful for track-finding algorithms and/or for improving track parameters behind the RICH detector Fig. 4 (right).

The concept of a GEM-based TRD and the prototype scheme are shown in Fig. 2 left and right panels, respectively. A photograph of the test beam setup showing the prototype detector with and without a radiator is included in Fig. 3.

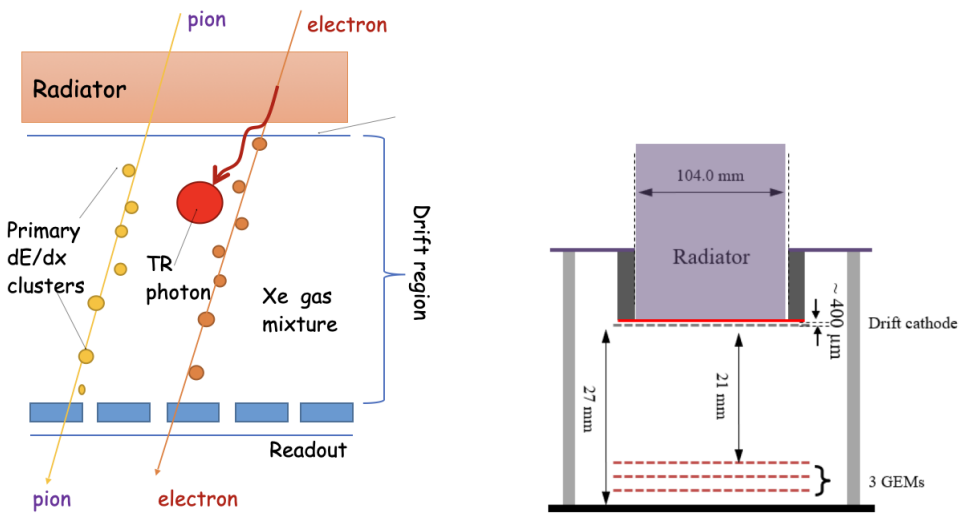

Figure 2: The basic concept of GEM-based TRD (left) and the prototype scheme (right).

During the EIC R&D (eRD22) several issues related to the operation were found: material budget and minizmization of the material along the particle track (test of different MPGD-based detectors), relatively large noise for the strip-based readout, a need for budget-friendly readout electronics for the streaming operation, high price for Xe-gas mixture and lack of gas re-circulation system, material budget and transition radiation yield/energy spectrum for TR-radiators, etc. Some of above issues were already addressed, but some need additional studies. In the section 4, we summarize those, which we beleave are the most important ones.

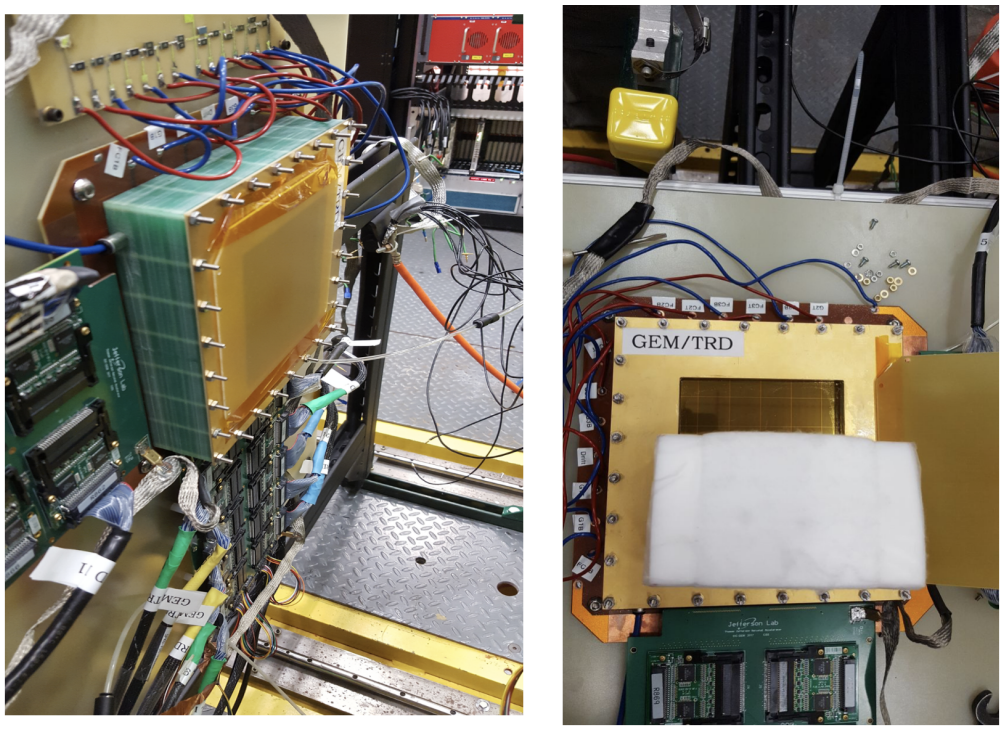

Figure 3: GEM-based TRD 10x10 cm^2 prototype with and without a radiator).

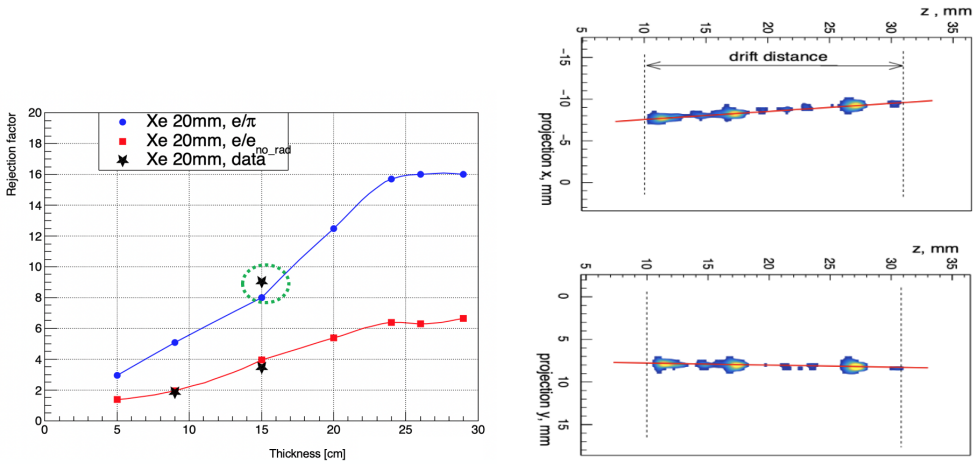

Figure 4: Rejection factor (left) and 3D track-segment (right).

4 Proposed program of work and deliverables

4.1 Prototyping

We propose to perform a series of tests of different MPGDs to study the characteristics of the signal collection, to optimize the material budget and other operation parameters. Different readout configurations will be investigated aiming to minimize the detector noise level, to optimize the number of readout channels, and the detector spatial resolution. For each design, measurements will be performed to charactarize the noise levels, gain uniformity, to perform HV and drift-time optimizations and establish baselines. This would require building several small prototypes (10x10 cm^2), which will be tested at JLab and at the Fermi Lab test beam facilities. The ultimate goal of the Fermi lab beam test would be to demonstrate e-π separation.

4.1.1 Micromegas prototype at Vanderbilt

A viable option for the absorber region of the MPGD-TRD is to use either a single layer of micromegas or a combination of micromegas and one layer of GEM. Previous MPGD-TRD prototypes used three layers of GEM. While this configuration has been studied extensively, other MPGD configurations have certain advantages and are worth considering and characterizing in detail. For example, replacing the triple GEM with a single layer of micromegas will significantly reduce the number of necessary HV channels if the triple GEM-based TRD is biased by individual channels of HVPS. The micromegas also have the advantage of more uniform gain over a larger surface area than the foil-based GEMs, making them more suitable for building large-area detectors. The operating voltage for micromegas-based TRD will be lower as compared to triple GEM-based TRD. In terms of the readout, both capacitive sharing readout board and 2D chevron readout board are excellent options for micromegas. The energy resolution of the micromegas is at par with the triple GEM detector. For large-scale detector production, the assembly of micromegas and a single GEM layer is simpler than producing multi-layered GEM structures. We plan to build and characterize two different 10 cm x 10 cm prototypes based on micromegas. One prototype will be based on 2D cheveron readout board and the other will be based on capacitive sharing readout board. The primary goal of these prototypes will be to achieve high spatial resolution with lower number of readout channels, along with PID performance comparable to the triple GEM TRD.

4.1.2 μRWELL prototype at JLab

Another MPGD structure of interest for TRD is the μRWELL detector. Like Micormegas, μRWELL is a single amplification structure MPGD that will replace the stack of 3 GEM foils in a triple-GEM detector. The μRWELL amplification structure itself is very similar to a GEM foil. The main advantage of μRWELL is its easy assembly since the detector does not require stretching and framing foils. This represents a big advantage for large production of such detectors with expected cost savings as well. We plan to build and test a small (10 cm $\times$ 10 cm) μRWELL-TRD prototype. The prototype will be equipped with capacitive-sharing strip readout to reduce channel counts while maintaining high spatial resolution capability. We will demonstrate with the prototype that μRWELL-TRD technology can have similar performance as a triple-GEM-TRD which has been extensively charaterized over the past 3 years.

4.2 Gain mapping device

Foil-based MPGDs always suffer from gain nonuniformity over their surface due to manifacturing defects. To get uniform performance in terms of energy resolution, it is important to have uniform gain from the MPGDs. Since this is not possible, it is important to produce detailed gain maps, such that during the R&D phase one can correlate various detector performance parameters with the corresponding MPGD gain. The gain map can be attained by radiating small sections of MPGD with highly collimated X-rays and measuring the effective gain locally from the irradiated region. The overall area of the MPGD can be scanned in steps of few millimeters by moving the X-ray tube along the surface of MPGD. We intend to fabricate and assemble an automated X-ray scanning device to be used for providing the gain map of different prototypes. The scanning device will also be used for future large-size prototypes and possibly, as a quality assurance device in large-scale detector construction.

4.3 HV system

In order to keep the electric field uniform a special field cage needs to be developed. This includes the mechanical design and construction of the field-/gas-cage to minimize a Xe-filled gas gap between the radiator and the drift cathode.

The MPGD-based TRD will need 2 HV lines, one for the MPGD amplification stage and the second to set a uniform drift field. To work in a high occupancy environment, the drift time needs to be minimized, requiring fields of ∼2-3 kV/cm. For a 2 cm drift distance the HV should be at the level of 4-5 kV. Depending on the chosen grounding scheme, the total voltage including GEM stage, could be up to 8-9 kV. Optimization of HV for large drift distances needs to be performed.

Optimization of HV for the use of different Xe/Kr-based gas-mixtures (drift velocity and readout time,as well as a gas gain optimization) will be required.

4.4 Gas system for Xe-Kr-CO2 mixture

Our gas mixing system which was developed by eRD22 is in operation. The actual percentages of the gas mixed by our system were measured with a gas chromatograph and showed very good performance.

Xe-based gas mixtures have traditionaly been more expensive than other heavy noble gases, such as Kr. In an effort to reduce the cost of gases needed to operate MPGD-TRDs, we would like to perform a new series of tests with different Xe/Kr/CO2-based gas mixtures. This would require slight modifications to our existing gas-mixing system to allow for an additional Kr gas line.

4.5 Gas system recirculation and purifier system

Over the past several years, the price of Xe has gone up significantly. It is no longer practical or an efficient use of funding to continue semi-frequent purchases. We plan to begin designing a small Xe gas cleaning and recirculation system to use with our MPGD-TRD prototypes. We plan compliment our current gas mixer and analyzer modules with additional modules needed to purify, distribute, circulate, and recover Xe gas. A cartoon block diagram of this is shown in Fig. 5. For the implementation of these modules we plan to build off the knowledge and expertise of the ATLAS experiment at CERN, who also installed a Xe recirculation gas system for their TRT detector.

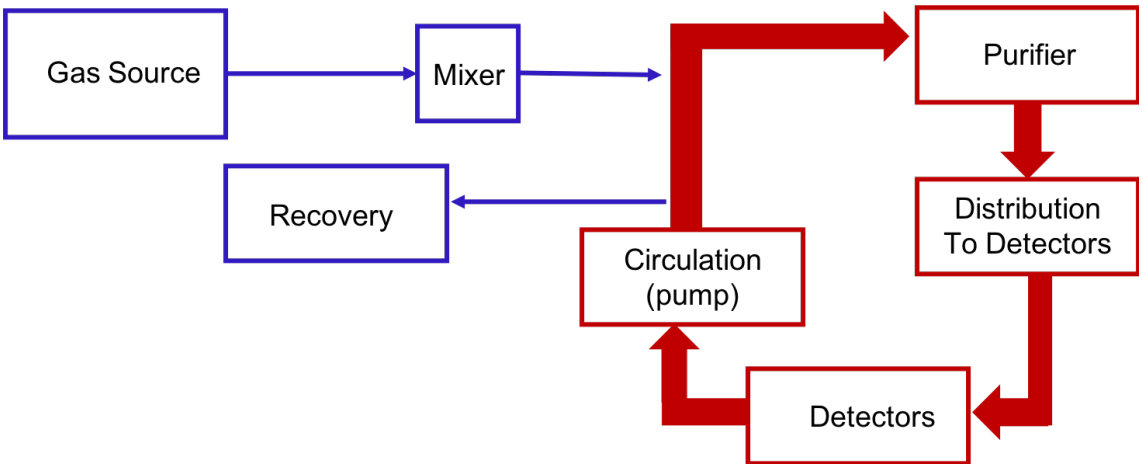

Figure 5: Cartoon block diagram for proposed GEM TRD gas recirculation system.

4.6 Online data procesing: ML-FPGA

Modern concepts of trigger-less readout and data streaming will produce a very large data volume to be read from the MPGD-based TRD detector. Most of it will be pedestals or noise, which are not interesting and ultimately will be discarded. In order to reduce a very large volume of the data stored on tapes, we would like to perform both the pre-processing of data and data

reduction in the early stages of the data acquisition. The growing computational power of modern FPGA boards allows us to add more sophisticated algorithms for real-time data processing, such as Machine Learning (ML) applications. The modern ML algorithms are naturally suited for FPGA architectures [5]. We are planing to perform a test of FPGA-based ML algorithms during the data taking with our prototypes.

4.7 Streaming readout

In the current tests the GEM-TRD uses the readout electronics originally developed for the GlueX wire chambers. It consist of a preamplifier (GAS2 ASIC chip) with shaping times of ∼10-12ns. The flash ADC has a sampling rate of 125 MHz and 12 bit resolution but provides only pipe-lined triggered readout. The total price is about $50 per channel. The collected high resolution data recorded in test beams allow us to estimate the minimum needed shaping time for the preamplifier, the FADC sampling rate and corresponding resolution.

We plan to readout two MPGD-TRD prototypes with recently adapted electronics that were previously employed on similar GEM-TRT detectors. For each prototype we are expecting to have 256 in X-Y plane channels. Also, we are planning to collaborate with the streaming readout group/consortium to identify and test a streaaming readout suitable for a transition radiation application.

The following items will be required for the readout:

- Baseboard PCB – this is a transition adapter PCB between the GEM and the preamp cards and also provides power distribution for the preamps. One Baseboard PCB holds 5 preamp cards for a total of 120 channels.
- Preamp Card – each preamp card has 24 channels of amplifier/shaper/driver, effected via 8-ch ASICs. Preamp cards plug into the Baseboard PCB for inputs from the MPGD;
- Data cables (ca 50 feet long) to provide signal transportation from the pre-amps to the ADC modules.
- Power cables (ca 50 feet long) to provide the preamps with the required power
- fADC125 modules, these 72-ch ADC modules sample the amplified and shaped detector signals from the preamps at 125 MHz.
- MPOD LV Modules

4.8 TR-radiator

A low mass radiator available for mass production is critical and various materials still need to be tested and optimized. This includes the optimization of a pseudo-regular radiator using thin ($\sim 12-15\,\mu$m) Kapton foils and thin net spacers, as well as a detailed test of available fleece/foam materials for TR-yield. We are planning to continue a test of new materials, that are currently available for a purchasing.

4.9 Simulation and data analysis

The detector simulation includes evaluation of the detector physics performance in-situ as part of EIC Detector-1. A separate stand-alone simulation will be developed in order to optimize the detector design. Various machine-learning algorithms will be investigated for application in the data analysis.

- **Detector performance:** This involves Geant4 simulation after integrating the detector in the official EIC Detector-1 simulation software. The simulation studies will focus on PID performance of MPGD-TRD in EIC detector-1 in association with the EMCAL in the hadron endcap. We will also study the track angular resolution, the effect of having additional tracking information from the MPGD-TRD and how it may assist in the performance of dRICH. Work is already underway to study these effects. MPGD-TRD has been implemented in both Fun4All and DD4Hep. In Fun4All, the detailed geometry of the absorber part of the detector (gas volume and MPGD layers) have been implemented and studies of the tracking performance with the MPGD-TRD in the hadron endcap are underway.

- **Detector hardware:** This involves using standalone simulation packages like Magbohltz, Heed and Finite Element Analysis software (ANSYS) to understand the properties of various proposed gas mixtures and also for designing the field cage. While the gas properties will be stuided in Magbohtlz and Heed, the design and the need of a field cage will be studied in ANSYS. The study of the properties of the gas mixture will be helpful in optimizing the drift field.

- **Data analysis using various Machine Learning algorithms/tools:** GEM-TRD project (eRD22) we used offline Machine Learning tools, such as JETNET and ROOT-based TMVA (Deep Neural Network). Nowdays many other new AI tools are available, such as Keras and Tensorflow for different types on neural networks: Graph Neural Network (GARNET) or Recurrent Neural Network (LSTM), etc. We will addopt the use of these AI tools for TRD applications.

5 Budget

Table 1 below summarizes the Jefferson Lab budget request for FY23. With reduced budget we are planning to build just one prototype instead of two with different readouts architecture. We will reduce ammount of electronics which we purchase. In case of 40% cost reduction only limited ammount of gas will be purchased. We also will focus only on JLAB beam tests (no travel) in case of the cost reduction. We would like to perform a test of our ML-based online data analysis, therefore we would like to purchase the FPGA board. Travel to the Fermilab beam test is included for 3 people (2 people in case of the 20% cost reduction).

Table 1: **JLAB: Xe-gas, readout and mechanics** FY23 request. Travel cost to the Fermilab test beam for 3 people is included.

	Request	**-20%**	**-40%**
Prototype	$15,000	$7,500	$7,500
Readout	$25,000	$25,000	$15,000
Xe/Kr Gas	$15,000	$ 15,000	$ 9,000
FPGA board	$8,500	$ 8,500	$ 8,500
Travel	$15,000	10,000	-
Overhead	$ 10,100	$7,900	$ 3,900
Total w/ Overhead	**$88,600**	**$73,900**	**$48,900**

Table 2 summarizes Vanderbilt University's budget request for FY23. If the original funding request is reduced by 20%, then one instead of two prototypes will be built. There will be some reduction in the supplies, and travel expenses to fit into the budget.
If the funding is reduced by 40%, then one prototype will be built and in addition, the gain mapping device will be built with reduced functionality, e.g. the scanner will have a smaller active area and will have unidirectional movement instead of bi-directional movement. The travel expenses will be reduced by sending just one person to test beam, instead of two and limiting the trip duration.

Table 2: **VU: prototype, mechanics, gain mapping device** FY23 request. Travel to the Fermilab and Jlab test beams for 2 people are included. We note that the fabricated equipment above $5k is not subject to the 58.5% overhead rate.

	Request	**-20%**	**-40%**
Prototype	$15,000	$7,500	$7,500
Gain mapping device (fabricated)	$15,000	$15,000	$11,451
Travel	$8,000	$7,247	$3,500
Supplies	$3,000	$2,500	$2,500
Overhead (ca 58.5%)	$6,435	$5,701	$3,510
Total w/ Overhead	**$47,435**	**$37,948**	**$28,461**

Table 3 summarizes Temple University's budget request. It includes materials needed to add a Kr gas line into our current gas mixing system and travel for a week to JLab to install it. Additional travel to Fermi Lab test beam is also requested for one person. In the senerio of a reduced budget travel to Fermi Lab beam test will be removed and the time allotted to spend at JLab installing the gas system will be reduced.

Table 3: **TU FY23 Request:** Modification to the gas mixing system to include Kr gas line and travel to JLab for assembly.

	Request	**-20%**	**-40%**
Materials	$4,000	$4,000	$4,000
Travel to JLab (Gas mixer install)	$3,000	$2,000	$1,000
Travel to Beam test (Fermi Lab)	$5,000	$0	$0
Total	$12,000	$6,000	$5,000
IDC (ca 58.5%)	$7,020	$3,510	$2,925
Total w/ Overhead	**$19,020**	**$9,510**	**$7,925**

Table 4: **UVa FY23 Request: HV system** For modeling and designing a field cage to provide a uniform electric field in the drift region and for the optimization of HV for the use of different gas mixtures.

	Request	**-20%**	**-40%**
Prototype	$4,000	$3,200	$2,400
Labor	$2,200	$1,760	$ 1,320
Total DC	$ 6,200	$4,960	$3,720
IDC (ca 62%)	$ 3,844	$3,075	$2,306
Total w/ Overhead	**$10,044**	**$8,035**	**$6,026**

The ODU budget request, summarized in Table 5, includes Xilinx Vivavdo ML $3,595 (with floating license), Xilinx Vitis Model Composer $700 (with floating license) and overhead(ca 60%), resulting to the total of $6,900.

Table 5: **ODU FY23 Request:** ML-FPGA.

	Request	**-20%**	**-40%**
FPGA	$4,300	$ 3,500	$3,000
Travel	$1,800	$1,450	$710
Overhead (ca 60%)	$3,800	$2,950	$2,190
Total w/ Overhead	**$9,900**	**$7,900**	**$5,900**

Table 5 below summarizes a total budget request for FY23.

Table 6: **Total Budget (includes overheads and IDCs).**

	Prototype	**Gas system**	**FPGA**	**Readout**	**Travel**	**Total Request**
JLAB	$ 16,300	$ 16,300	$ 9,300	$27,200	$19,500	88,600
Temple U.	–	$6,340	–	–	$12,680	$19,020
ODU	–	–	$6,900	–	$3,000	$9,900
UVa	$10,044	–	–	–	–	$10,044
Vanderbilt U.	$ 30,000	$ 4,755	—	–	$ 12,680	$ 47,435
Total	$56,344	$ 27,395	$ 16,200	$ 27,200	47,860	$ 174,999

Table 7: **A total** FY23 request.

	Request	**-20%**	**-40%**
JLAB	$88,600	$73,900	$48,900
Temple U	$19,020	$ 9,510	$ 7,925
ODU	$ 9,900	$7,900	$5,900
UVa	$10,044	$8,035	$6,026
Vanderbilt	$47,435	$37,948	$28,461
Total	**$174,999**	**$ 137,293**	**$97,212**

6 Personnel

None of the JLAB, Temple, UVA, ODU, or Vanderbilt team members are funded by EIC R&D.

Jefferson Lab (JLAB):
F. Barbosa Electronics Engineer 10%
C. Dickover Electronics Engineer 15%
S. Furletov Research Scientist 5 %
Y. Furletova Research Scientist 20 %
K. Gnanvo Research Scientist 5 %
L. Pentchev Research Scientist 5 %
C. Stanislav Technical Staff 10%
B. Zihlmann Research Scientist 5 %

Temple University (TU):
M. Posik Associate Research Professor 10 %
B. Surrow Professor 5 %

University of Virginia (UVa):
N. Liyanage Professor 10%
H. Nguyen Research Scientist 5%

Old Dominion University (ODU):
L.Belfore Professor 5 %

Vanderbilt University (VU):
S. Greene Professor 5 %
L. Kasper Graduate student 75 %
S. Tarafdar Research Scientist 25 %
J. Velkovska Professor 10 %

7 Diversity, Equity and Inclusion

This proposal is likely unique in the fact that it has two female scientists as contact persons (Furletova and Velkovska), and includes a third female faculty (Greene). We are committed to leverage this uncommon composition to address the persistent under-representation of women earning doctoral degrees. This happens one student at a time, by providing positive examples, and creating a welcoming and inclusive environment. We have already recruited a female graduate student, Ms. Lauren Kasper of Vanderbilt University, and some of the proposed research will be included in her Ph.D. thesis. While Ms. Kasper's stipend is funded by the college of Arts and Sciences at Vanderbilt and by the group's DoE grant, the proposed prototypes and equipment are not. Funding this proposal will give her the opportunity to engage in cutting edge R&D collaborating with some of the world's experts on MPGDs and transition radiation detectors.

This proposal will establish a close collaboration between several institutions. Proposed R&D projects are suitable for engaging undergraduate students, either through summer Research Experience for Undergraduates, or during the academic year. We are committed to recruiting under-represented minorities to participate in our activities. In fact, some of the institutions involved in this proposal already have established a track record of female REU students participating in MPGD projects, as well as students from disadvantged backgrounds.

Our team is composed of scientists with diverse backgrounds and expertise bringing together members of the hot and cold QCD physics communities. We have research scientists, professors, students, engineers, and technical staff, who have expertise in hardware, simulation, electronics, DAQ, FPGA, and data analysis. We also have significant experience and leadership (e.g., APS committee of Status of Women, DNP Allies, experimental collaboration and institutional DEI committees) actively working to create an inclusive space free of harassment and micro-aggression,

where everyone can share their interests and exchange ideas, regardless of their ethnic origin, color, gender, sexual orientation, gender identity, etc., of the scientist. Our collaboration will present opportunities to train some of the future physicists who are likely to make contributions to EIC science far into the future.

8 Student supervision

The project will involve graduate student L. Kasper, and undergraduate students. The students will be supported from funds external to this project. The students will be supervised by faculty at their respective institutions, but we anticipate that they will also engage in collaborative activities with other members of the team.

9 Publications

NIM paper [3], JINST journal [5], participation in the EIC Yellow report activity [1], and SnowMass2021 EOI [6] and white paper [7].

References

[1] Eic yellow report.http://www.eicug.org/web/content/yellow-report-initiative.

[2] Athena detector proposal a totally hermetic electron nucleus apparatus proposed for ip6 at the electron-ion collider, reference no. jinst_063p_0522.

[3] F. Barbosa, et al., A new transition radiation detector based on gem technology, Nucl. Instrum. Meth. (2019). doi:DOI:10.1016/j.nima.2019.162356.

[4] https://wiki.bnl.gov/conferences/index.php/eic_r%25d.

[5] S. Furletov, et al., Machine learning on fpga for event selection, 2022 JINST 17 C06009.

[6] B. Azmoun, et al., Snowmass 2021 expression of interest: Mpgd-based transition radiation detector.https://www.snowmass21.org/docs/files/summaries/IF/SNOWMASS21-IF5_IF0-193.pdf.

[7] F. Barbosa, D. Bazin, F. Bossú, M. Cortesi, S. D. Torre, S. Furletov, Y. Furletova, P. Gueye, K. Gnanvo, M. Hohlmann, W. Mittig, D. Neyret, M. Posik, C. Wrede, Snowmass 2021 instrumentation frontier (if5 - mpgds) – white paper 2: Micro pattern gaseous detectors for nuclear physics (2022). doi:10.48550/ARXIV.2203.06309.
URL https://arxiv.org/abs/2203.06309