IMPROVEMENTS TO THE LASER POLARIZATION MEASUREMENT INSIDE A FABRY-PEROT CAVITY

S. A. Premathilake, University Of Virginia

ABSTRACT

The Compton polarimeter at Jefferson Lab's experimental Hall A provides a continuous, non-invasive measurement of electron beam polarization via electron photon scattering. The electron beam passing through the polarimeter intercepts green laser light stored in a Fabry-Perot cavity. Scattered electrons are detected in an electron detector while back scattered photons are detected in a GSO crystal calorimeter. For an accurate beam polarization measurement, the laser polarization inside the Fabry-Perot cavity must be well known. We have performed studies to optimize the laser polarization inside the cavity and to know it precisely.

FROM ASYMMETRIES TO POLARIZATION

- The Cross section of Compton scattering is different for right and left circularly polarized electrons on polarized photons.

$$A_{meas} = \frac{Y_R - Y_L}{Y_R + Y_L}$$

- We use this asymmetry to calculate beam polarization.

$$A_{meas} = P_\gamma P_e A_{compton}$$

Where, $p_{\gamma\,(e)}$ is laser(electron beam) polarization

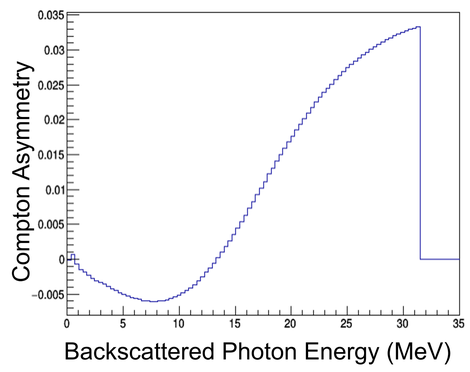

HALL A COMPTON SETUP

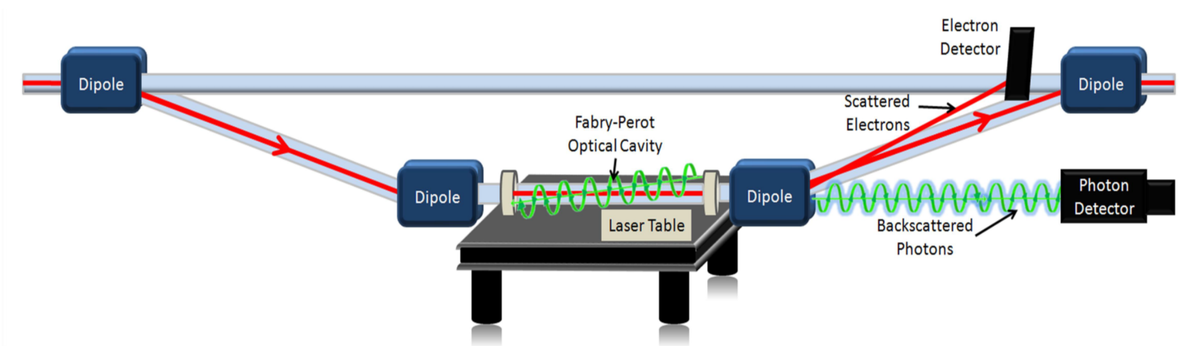

- Four dipole magnets bend electron beam through a chicane.
- Electron beam collides with green laser locked to a Fabry-Perot optical cavity.
- Detect scattered electrons and backscattered photons separately.

FABRY-PEROT CAVITY

- Fabry-Perot cavity is a resonator which consists of two high reflective mirrors that form a standing light waves between them.
- Due to constructive interferences, the laser power circulating in the cavity will be enhanced with respect to the laser power coupled to it.

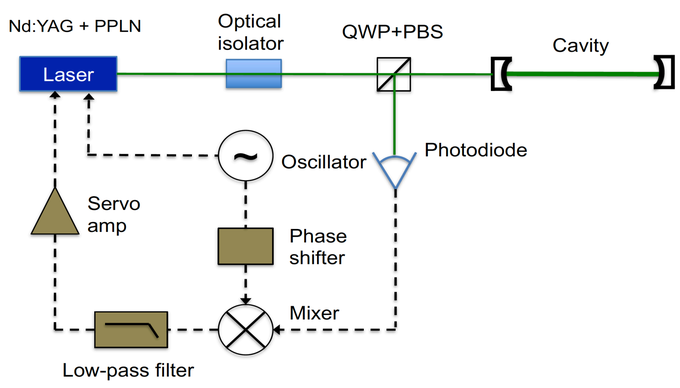

COMPTON LASER SYSTEM

- Narrow line width 1064 nm seed laser
- Fiber amplifier
- PPLN doubling crystal
- High gain Fabry-Perot cavity
- Polarization manipulation/ monitoring optics

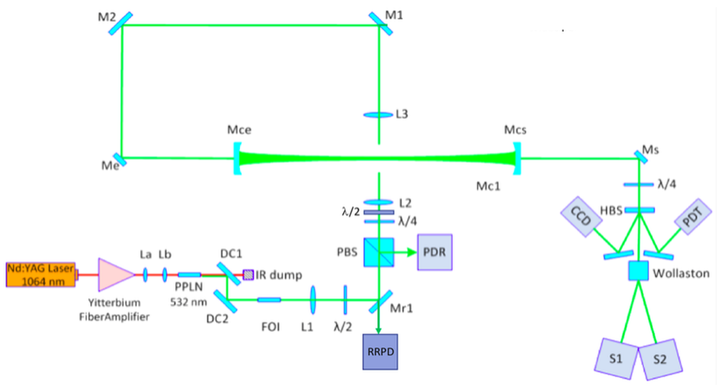

LASER POLARIZATION

- Optical reversibility allows configuring system to give 100% DOCP at the cavity.
- Scanning combination of half & quarter wave plates and monitoring the reflected power, we can build a model for the entrance function → developed during Qweak

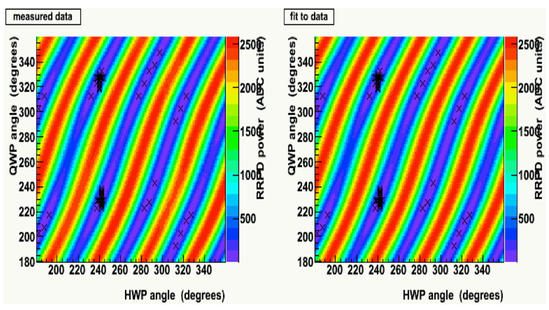

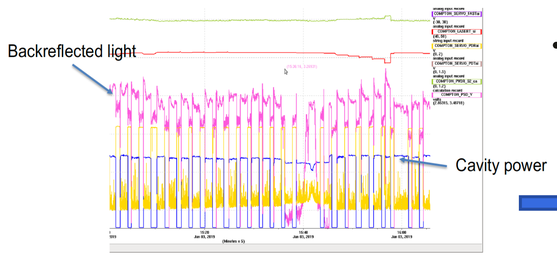

- Unlike Qweak when locking the cavity we saw backreflected light from cavity increasing implying possible polarization change between cavity locked and unlocked.

→ Evidence for Cavity Birefringence in Hall A Fabry-Perot Cavity

DETERMINATION OF CAVITY BIREFRINGENCE

- To measure cavity birefringence we prepare known input states & measure the polarization after the 2nd cavity mirror.

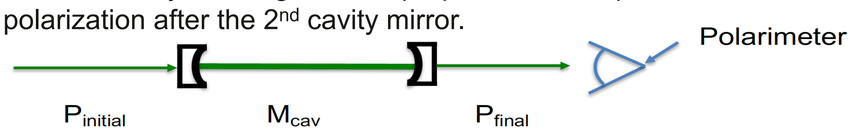

$P_{final} = M_{cav} P_{initial}$ M_{cav} - Birefringence due to the cavity system

- Due to geometrical/locking-servo constrains we had to use a non polarizing beam splitter (NPBS).
- Unfortunately NPBS has some birefringence so must be characterized.

NPBS CHARACTERIZATION

- Measured stokes parameters of light transmitted through NBPS for several initial states.
- The laser polarization was set to left and right circular, horizontal, vertical and +/- 45 deg, linear and measured stokes parameters using rotating QWP + fixed polarizer technique.

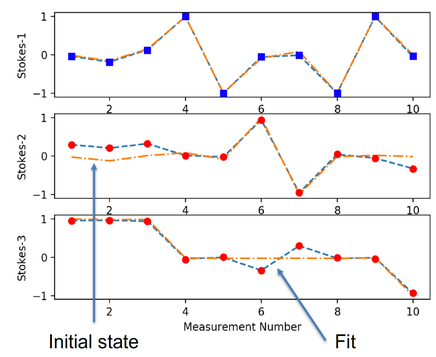

CAVITY BIREFRINGENCE

- While doing the QWP/HWP scans we came across another interesting mystery → depolarization in the air at high cavity power
- We continue the polarization study at low power due to this effect.

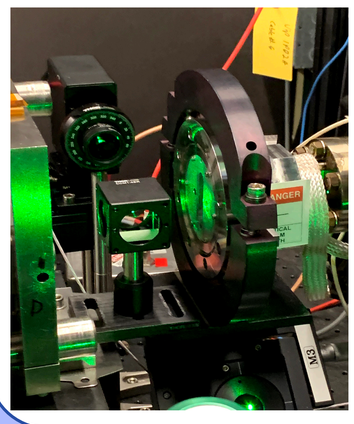

- Performed scans for different QWP/HWP states.
- Used the NPBS inverted matrix to infer the initial polarization before the NPBS from measured stokes parameters.

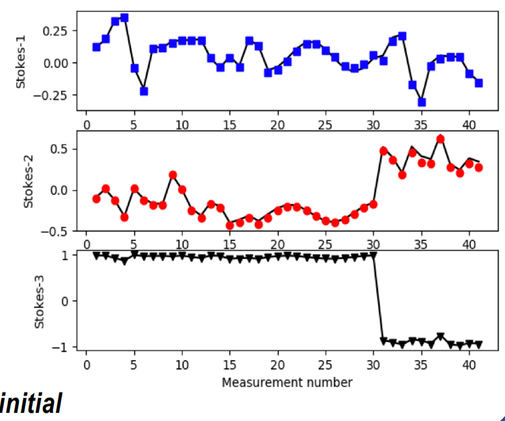

$P_{final} = M_{NPBS} M_{cav} P_{initial}$

TESTING CAVITY DOCP MODEL

- With cavity birefringence and entrance function, can predict DOCP in cavity and determine optimum settings for left and right circular polarization.

$$P_{cavity} = M_{cav} M_E P_{initial}$$

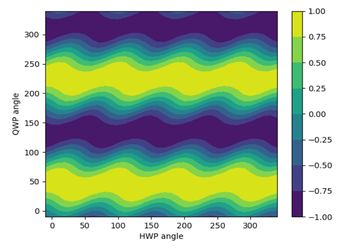

- Ran PREX-II & CREX experiments at these optimal positions.
- Model of polarization in cavity can be tested using asymmetry data from polarimeter.
- From the preliminary data we can see a good agreement (data under analysis).

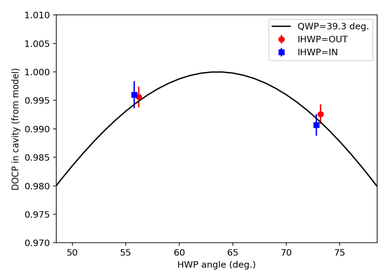

SUMMARY

- We use a Fabry-Perot cavity for Compton polarimetry measurements at Jefferson Lab hall A.
- Laser polarization inside the cavity is a key source of systematic uncertainty that must be controlled.
- Previous technique of measuring the polarization suffers from birefringence changes due to mechanical stresses.
- We have a new technique to determine the laser polarization inside a Fabry-Perot cavity which measures the cavity birefringence directly.
- Tested the model of cavity polarization with asymmetry data taken during PREX-II & CREX running
- Good agreement with data to model.